AUTOBRAKE 2000

MODEL: AB1014 & AB1014K

PARTS MANUAL

H. WEISS MACHINERY & SUPPLY

ROPER WHITNEY OF ROCKFORD
2833 HUFFMAN BLVD
ROCKFORD, IL 61103
815-962-3011

www.roperwhitney.com

H. WEISS MACHINERY & SUPPLY

AB1014 AND AB1014K

TABLE OF CONTENTS:

SECTION 1.....BASIC MECHANICAL

SECTION 2.....ELECTRICAL AND CONTROLS

SECTION 3.....BACKGAUGE

-- 39” AIR BACKGAUGE

-- 61” AIR BACKGAUGE

-- 61” W/O AIR BACKGAUGE

H. WEISS MACHINERY & SUPPLY

H. WEISS MACHINERY & SUPPLY

SECTION 1:

BASIC MECHANICAL

KOMBI BEAM

{LEFT-HAND END SHOWN}

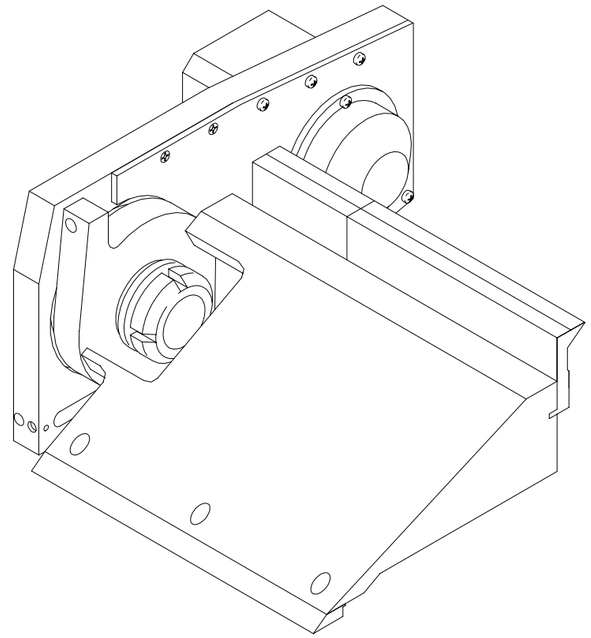

STRAIGHT BEAM

{LEFT-HAND END SHOWN}

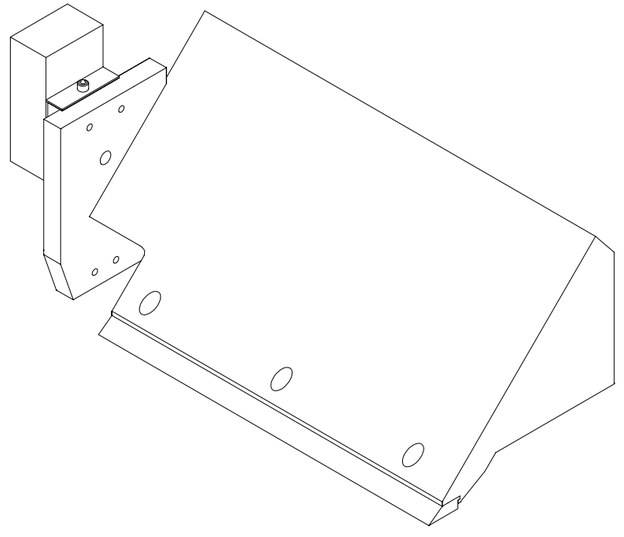

H. WEISS MACHINERY & SUPPLY

BASIC MECHANICAL - AB1014

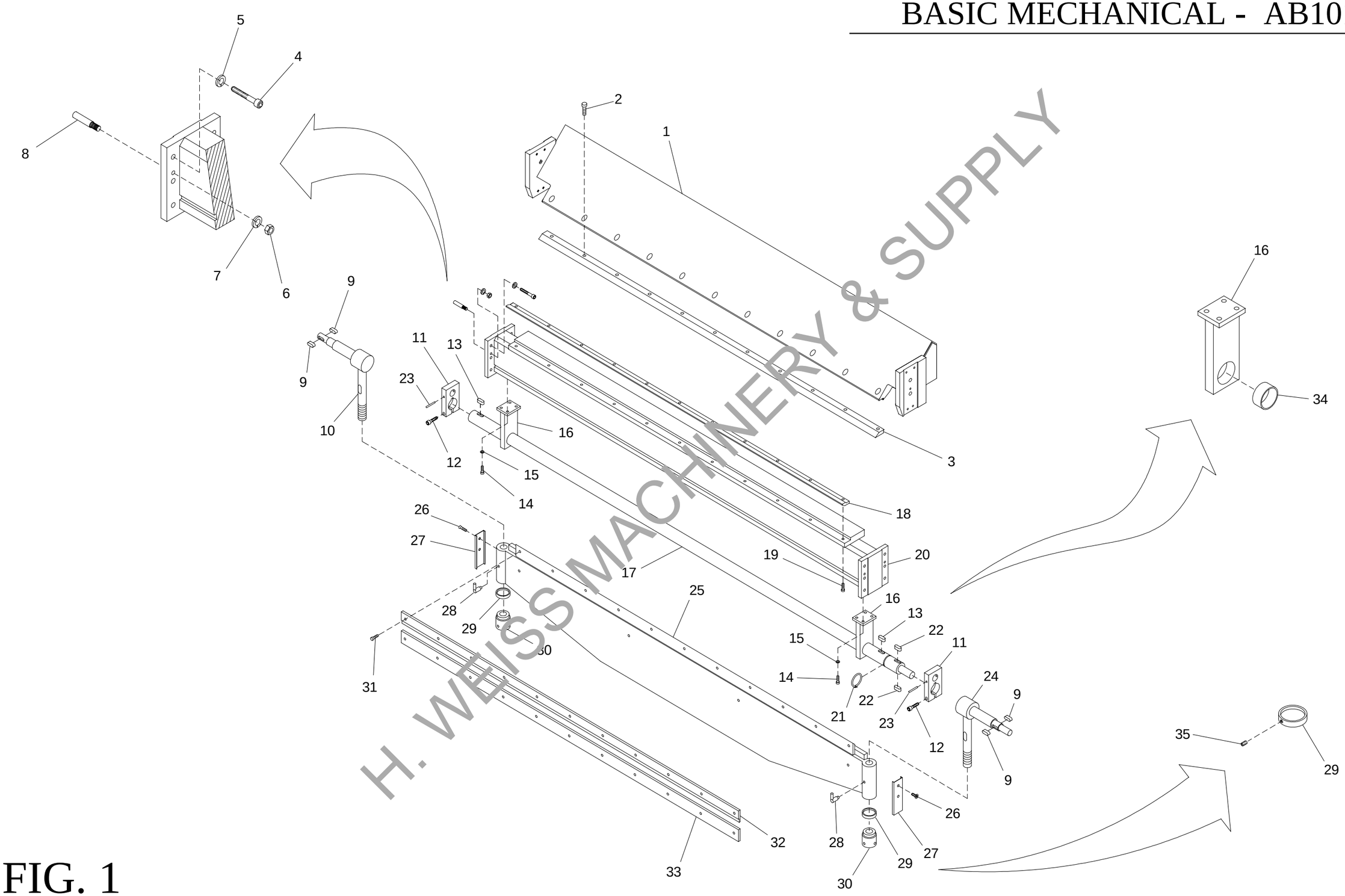

H. WEISS MACHINERY & SUPPLY

FIG. 1

H. WEISS MACHINERY & SUPPLY PHONE: (718) 605-0395 - www.hweiss.com

STRAIGHT MACHINE ASSEMBLY

ITEM	QTY	RW PART #	RW PART DESCRIPTION	ITEM	QTY	RW PART #	RW PART DESCRIPTION
1	1	689020408	STRAIGHT BEAM	**19**	13	686012674	12 X 20 mm SHC SCREW
2	13	686012672	12 X 20 mm SHC LOW HD SCREW	**20**	1	689020409	BEAM, LOWER
3	1	689020150	JAW, UPPER	**21**	1	686164335	SNAP RING
4	12	686012712	16 X 50mm SHC SCREW	**22**	2	786530507	KEY, DRIVE SHAFT -LONG (60mm)
5	12	686033183	16mm LOCK WASHER	**23**	2	686033504	6 X 80mm ROLL PIN
6	4	686023061	12mm HEX NUT	**24**	1	689000203	HINGE, R.H. BENDING BEAM
7	4	686033185	12mm LOCK WASHER	**25**	1	689020397	BEAM, BENDING
8	4	689160167	ALIGNMENT PIN	**26**	4	686012735	5 X 8 mm SOC HD FLAT SCREW
9	4	786530391	KEY, DRIVE	**27**	2	786220403	SHIELD, ADJUSTING NUT
10	1	689000204	HINGE, L.H. BENDING BEAM	**28**	2	689460116	HANDLE, APRON LOCKING
11	2	689000250	LINK, CLAMPING DRIVE	**29**	2	689300268	RING SCALE
12	2	686012714	12 X 60 mm SHC SCREW	**30**	2	689560269	NUT, ADJUSTING
13	2	689000400	KEY, DRIVE SHAFT -SMALL (50mm)	**31**	13	686012673	12 X 30 mm SOC HD BUTTON SCREW
14	8	686012713	8 X 25 mm SHC SCREW	**32**	1	689120152	BAR, THIN BENDING 7mm/10mm
15	8	686033175	8 mm FLAT WASHER	**33**	1	689120151	BAR, THICK BENDING 20mm
16	2	786180362	SUPPORT, CLAMP SHAFT	**34**	2	686194714	BEARING, SHAFT SUPPORT (PG606530A)
17	1	689680401	SHAFT, CLAMPING DRIVE	**35**	2	686012730	5 X 5mm SOC SET SCREW
18	1	689020149	JAW, LOWER				

H. WEISS MACHINERY & SUPPLY

BASIC MECHANICAL - AB1014

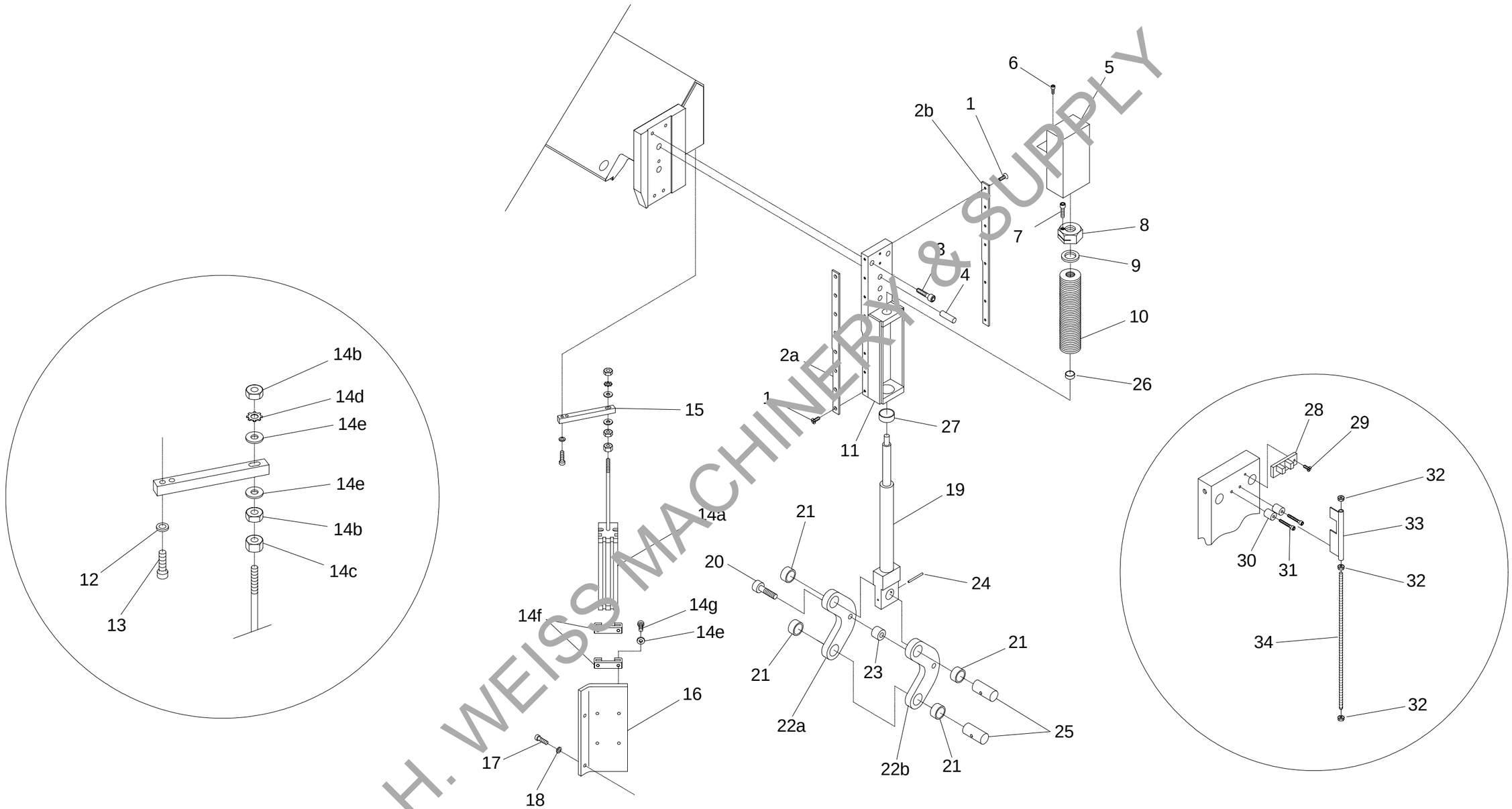

H. WEISS MACHINERY & SUPPLY

FIG. 2

H. WEISS MACHINERY & SUPPLY PHONE: (718) 605-0395 - www.hweiss.com

RIGHT-HAND STRAIGHT PULLDOWN ASSEMBLY

ITEM	QTY	RW PART #	RW PART DESCRIPTION	ITEM	QTY	RW PART #	RW PART DESCRIPTION
1	16	686012695	5 X 10 mm SHF SCREW	**15**	1	786200509	BRACKET, ENCODER -- RAM MOUNT (ORION CONTROL ONLY)
2	1 SET	689080283	PULLDOWN GIB SET	**16**	1	786200510	BRACKET, ENCODER -- LEG MOUNT (ORION CONTROL ONLY)
-- 2a	1	689080421	GIB, R.H. PULLDOWN	**17**	2	686012732	6 X 10 mm SCREW (ORION CONTROL ONLY)
-- 2b	1	689080420	GIB, L.H. PULLDOWN	**18**	2	686033173	6 mm FLAT WASHER (ORION CONTROL ONLY)
3	4	786012714	12 X 60 mm SHC SCREW	**19**	1	689680249	PULLDOWN ROD ASSY
4	2	686053391	20 X 70mm DOWEL PIN	**20**	1	686012728	10 X 70 mm HEX HD SCREW
5	1	689220567	COVER, R.H. CLAMPING SPRING	**21**	4	686194703	BEARING, PG404420A
6	1	686012732	6 X 10 mm PHILLIPS HD SCREW	**22**	1	689000213	C-LINKS (1 SET)
7	1	686012738	8 X 22 mm SHC SCREW	**-- 22a**	1	689000415	C-LINK, R.H.
8	1	786000317	NUT, SPLIT CLAMP	**-- 22b**	1	689000414	C-LINK, L.H.
9	1	786830530	WASHER, SPRING STACK RETAINING	**23**	1	786630490	SPACER, C-LINK
10	40	689790115	SPRING, CLAMP DISC	**24**	1	686063505	6 X 60mm ROLL PIN
11	1	786000354	PULLDOWN WELDMENT	**25**	2	689160253	PIN, PULLDOWN DRIVE
12	2	686033178	5 mm FLAT WASHER	**26**	1	686194704	BUSHING, SM. PULLDOWN (PG252820A)
13	2	686012707	5 X 8 mm SHC SCREW	**27**	1	686194707	BUSHING, LG. PULLDOWN (PG404430A)
14	1	660000385	LINEAR ENCODER KIT (ORION CONTROL ONLY)	**28**	1	660152673	SENSOR, OPTICAL
-- 14a	1	660000479	ENCODER, LINEAR (without kit)	**29**	1	686012742	4 X 16 SLOTTED HD SCREW
-- 14b	2	686023069	6mm HEX JAM NUT	**30**	2	686000573	GUIDE, PLASTIC CYLINDER
-- 14c	1	686023064	6mm HEX FULL NUT	**31**	2	686012721	6 X 30 mm SHC SCREW
-- 14d	1	686033188	6mm STAR LOCK NUT	**32**	3	686023064	6 mm HEX NUT
-- 14e	6	686033173	6mm FLAT WASHER	**33**	1	786000500	FLAG, SENSOR
-- 14f	2	686000587	BRACKET, ENCODER MOUNTING	**34**	1	786000499	6 X 100 mm THREADED ROD
-- 14g	4	686012732	6 X 10 mm PHILLIPS HD SCREW				

H. WEISS MACHINERY & SUPPLY

BASIC MECHANICAL - AB1014

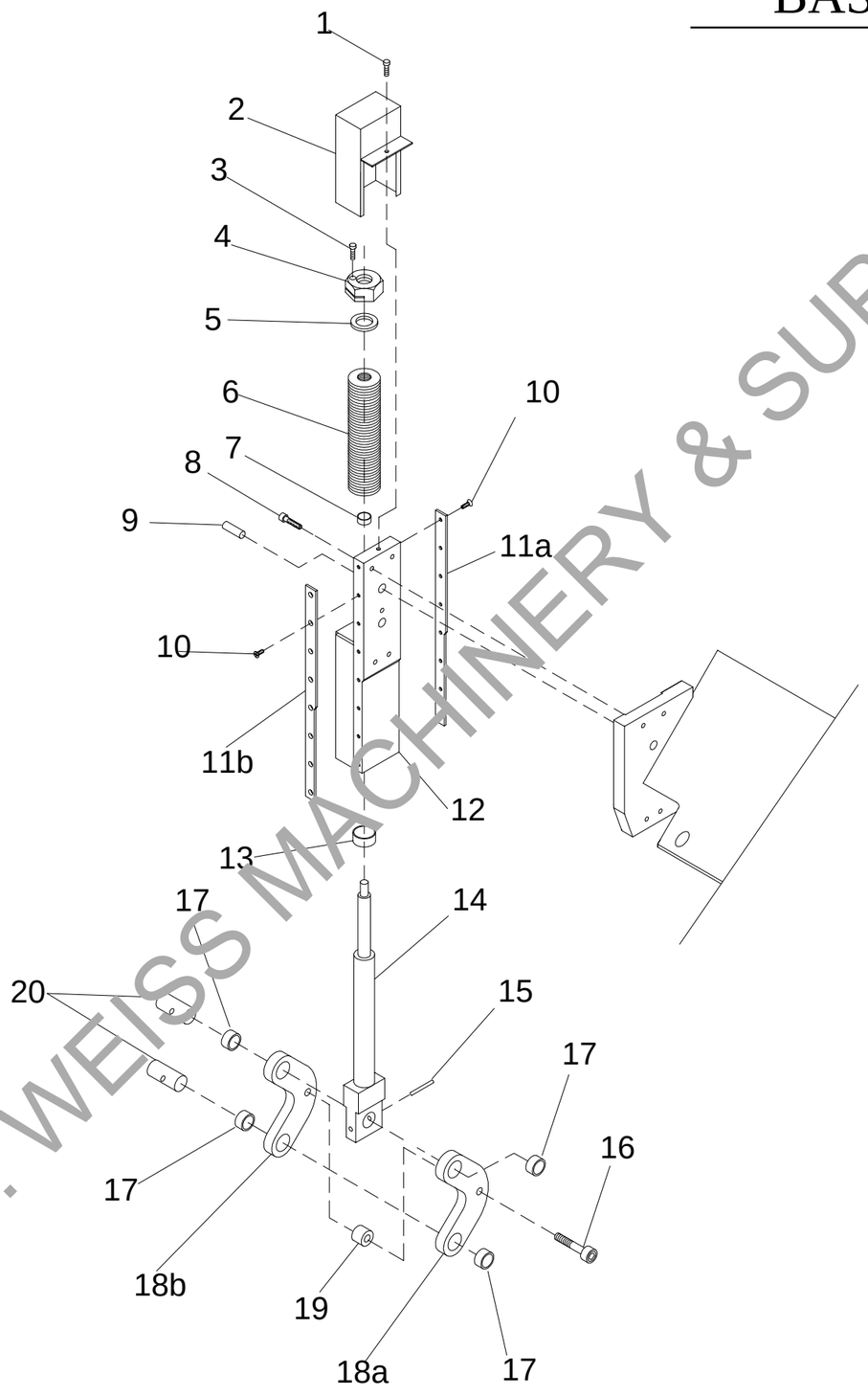

H. WEISS MACHINERY & SUPPLY

FIG. 3

H. WEISS MACHINERY & SUPPLY PHONE: (718) 605-0395 - www.hweiss.com

LEFT-HAND STRAIGHT PULLDOWN ASSEMBLY

ITEM	QTY	RW PART #	RW PART DESCRIPTION	ITEM	QTY	RW PART #	RW PART DESCRIPTION
1	1	686012732	6 X 10 mm PHILLIPS HD SCREW	**12**	1	786000354	PULLDOWN WELDMENT
2	1	689220323	COVER, L.H. CLAMPING SPRING	**13**	1	686194707	BEARING, PG 404430A
3	1	686012738	8 X 22 mm SHC SCREW	**14**	1	689680249	PULLDOWN ROD ASSY
4	1	786000317	NUT, SPLIT CLAMP	**15**	1	686013505	6 X 60 mm ROLL PIN
5	1	786830530	WASHER, SPRING STACK RETAINING	**16**	1	686012728	10 X 70 mm HEX HD SCREW
6	40	689790115	SPRING, CLAMP DISC	**17**	1	686194703	BEARING, PG 404420A
7	1	686194704	BEARING, PG 252820A	**18**	1	689000213	C-LINKS (1 SET)
8	5	786012714	12 X 60 mm SHC SCREW	**-- 18a**	1	689000414	C-LINK, L.H.
9	2	686053391	20 X 70 mm DOWEL PIN	**18b**	1	689000415	C-LINK, R.H.
10	16	686012695	5 X 10 mm SHF SCREW	**19**	1	786630490	SPACER, C-LINK
11	1 SET	689080283	PULLDOWN GIB SET	**20**	2	689160253	PIN, PULLDOWN DRIVE
-- 11a	1	689080420	GIB, L.H. PULLDOWN				
-- 11b	1	689080421	GIB, R.H. PULLDOWN				

H. WEISS MACHINERY & SUPPLY

BASIC MECHANICAL - AB1014K

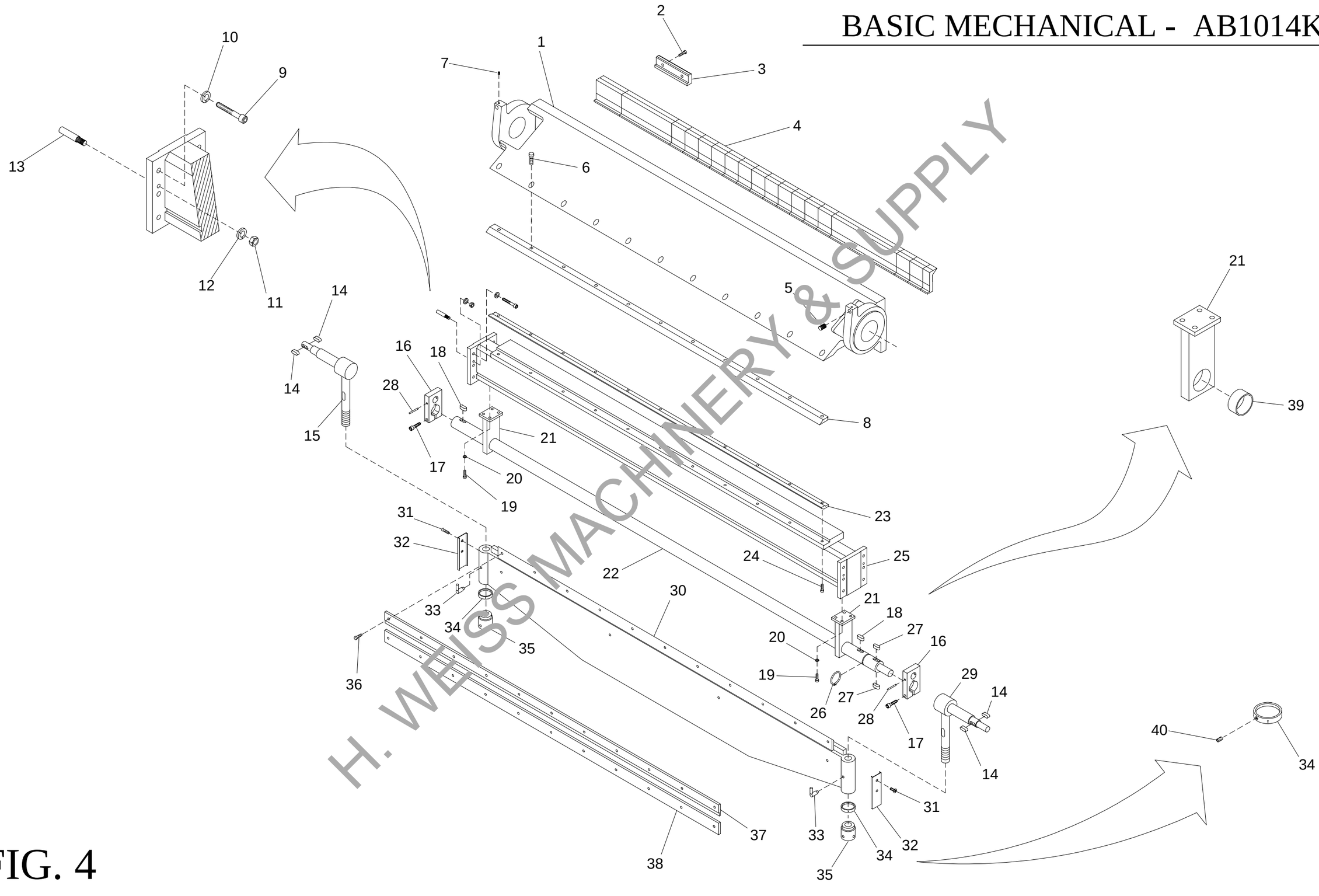

H. WEISS MACHINERY & SUPPLY

FIG. 4

H. WEISS MACHINERY & SUPPLY PHONE: (718) 605-0395 - www.hweiss.com

KOMBI MACHINE ASSEMBLY

ITEM	QTY	RW PART #	RW PART DESCRIPTION	ITEM	QTY	RW PART #	RW PART DESCRIPTION
1	1	689020183	KOMBI BEAM	**21**	2	786180362	SUPPORT, CLAMP SHAFT
2	24	686012676	12 X 35 mm SHC SCREW	**22**	1	689680401	SHAFT, CLAMPING DRIVE
3	12	689010350	CLAMP, KOMBI TOOL	**23**	1	689020149	JAW, LOWER
4	1	689670282	TOOLING, KOMBI FINGER FULL SET	**24**	13	686012674	12 X 30 mm SHC SCREW
5	4	686012736	20 X 45 mm SOC SET SCREW	**25**	1	689020409	BEAM, LOWER
6	13	686012672	12 X 20 mm SHC LOW HD SCREW	**26**	1	686164335	SNAP RING
7	4	686012748	5 X 10mm SOC SET SCREW	**27**	2	786530507	KEY, DRIVE SHAFT -LONG (60mm)
8	1	689020150	JAW, UPPER	**28**	2	686063504	6 X 80mm ROLL PIN
9	12	686012712	16 X 50mm SHC SCREW	**29**	1	689000203	HINGE, R.H. BENDING BEAM
10	12	686033183	16mm LOCK WASHER	**30**	1	689020397	BEAM, BENDING
11	4	686023061	12mm HEX NUT	**31**	4	686012735	5 X 8 mm SOC HD FLAT SCREW
12	4	686033185	12mm LOCK WASHER	**32**	2	786220403	SHIELD, ADJUSTING NUT
13	4	689160167	ALIGNMENT PIN	**33**	2	689460116	HANDLE, APRON LOCKING
14	4	786530391	KEY, DRIVE	**34**	2	689300268	RING SCALE
15	1	689000204	HINGE, L.H. BENDING BEAM	**35**	2	689560269	NUT, ADJUSTING
16	2	689000250	LINK, CLAMPING DRIVE	**36**	13	686012673	12 X 30 mm SOC HD BUTTON
17	2	686012714	12 X 60 mm SHC SCREW	**37**	1	689120152	BAR, THIN BENDING 7mm/10mm
18	2	689000400	KEY, DRIVE SHAFT - SMALL (50mm)	**38**	1	689120151	BAR, THICK BENDING 20mm
19	8	686012713	8 X 25 mm SHC SCREW	**39**	2	686194714	BEARING, SHAFT SUPPORT (PG606530A)
20	8	686033175	8 mm FLAT WASHER	**40**	2	686012730	5 X 5mm SOC SET SCREW

H. WEISS MACHINERY & SUPPLY

BASIC MECHANICAL - AB1014K

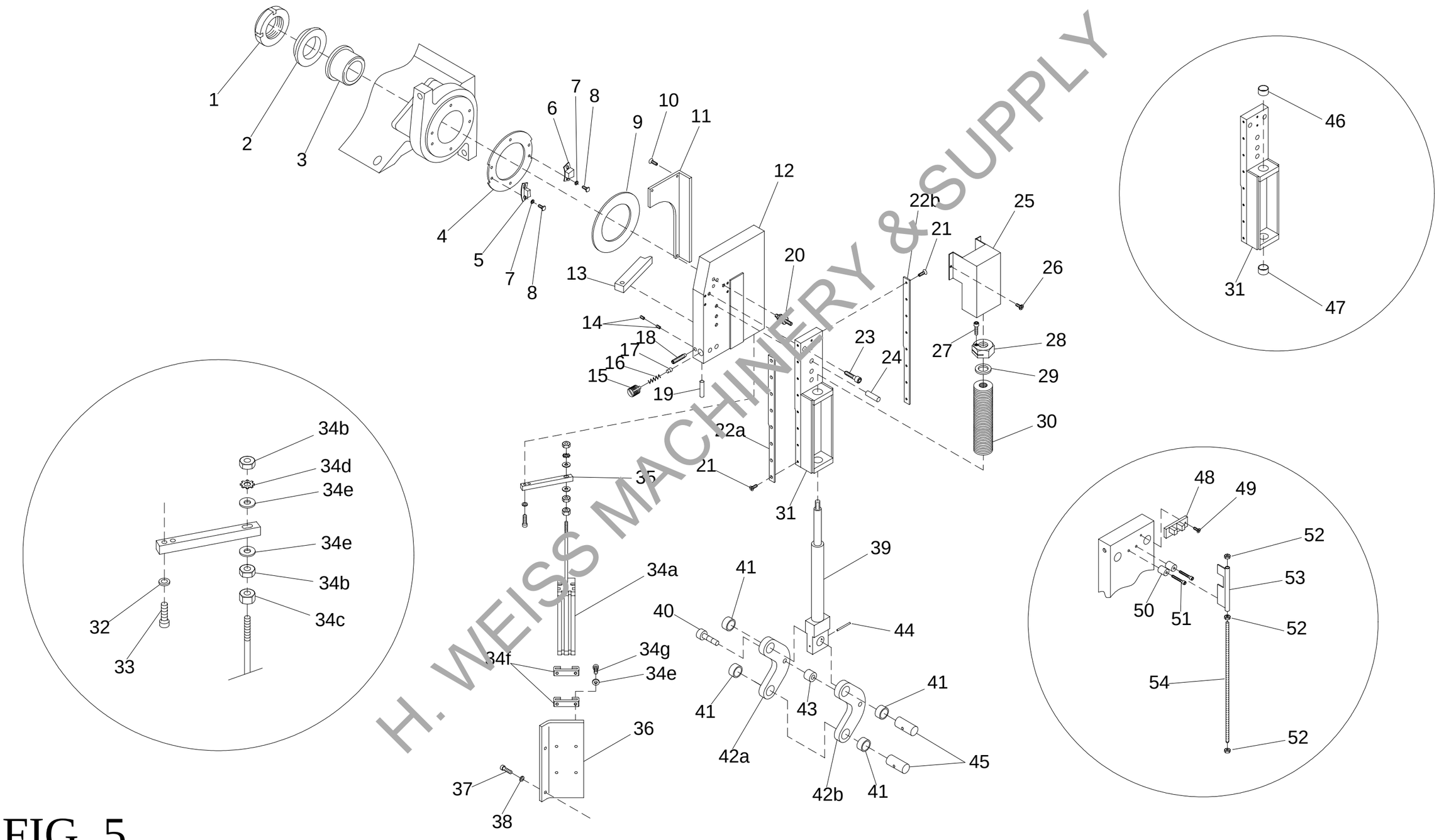

H. WEISS MACHINERY & SUPPLY

FIG. 5

RIGHT-HAND KOMBI PULLDOWN ASSEMBLY

ITEM	QTY	RW PART #	RW PART DESCRIPTION	ITEM	QTY	RW PART #	RW PART DESCRIPTION
1	1	786560352	NUT, KOMBI LOCKING	**31**	1	786000354	PULLDOWN WELDMENT
2	1	786080389	BEARING, KOMBI THRUST	**32**	1	686033178	5 mm FLAT WASHER
3	1	686194744	BEARING, KOMBI FLANGE	**33**	1	686012707	5 X 8 mm SHC SCREW
4	1	786630450	SPACER, R.H. FIBER	**34**	1	660000385	LINEAR ENCODER KIT (ORION CONTROL ONLY)
5	1	786130388	FLAG, STRAIGHT TOOL	**-- 34a**	1	660000479	ENCODER, LINEAR (without kit)
6	1	786130387	FLAG, BOX TOOL	**-- 34b**	2	686023069	6mm HEX JAM NUT
7	4	686033178	5mm FLAT WASHER	**-- 34c**	1	686023064	6mm HEX FULL NUT
8	4	686012758	5 X 16mm LOW HD HEX SCREW	**-- 34d**	1	686033182	6mm STAR LOCK NUT
9	1	786630450	FIBER WASHER	**-- 34e**	6	686033173	6mm FLAT WASHER
10	3	686012756	4 X 8mm FLAT HD SCREW	**-- 34f**	2	686000587	BRACKET, ENCODER MOUNTING
11	1	786440399	GUARD, R.H. PULLDOWN	**-- 34g**	4	686012732	6 X 10 mm PHILLIPS HD SCREW
12	1	786080348	PULLDOWN, R.H. KOMBI	**35**	1	786200509	BRACKET, ENCODER -- RAM MOUNT (ORION CONTROL ONLY)
13	1	786330384	LATCH, KOMBI LOCKING	**36**	1	786200510	BRACKET, ENCODER -- LEG MOUNT (ORION CONTROL ONLY)
14	2	686012752	6 X 6mm SOC SET SCREW	**37**	2	686012732	6 X 10 mm SCREW (ORION CONTROL ONLY)
15	1	786260519	RETAINER, SPRING	**38**	2	686033173	6 mm FLAT WASHER (ORION CONTROL ONLY)
16	1	686184618	SPRING, LATCH	**39**	1	689680249	PULLDOWN ROD ASSY
17	1	786160520	PIN, ACTUATION	**40**	1	686012728	10 X 70 mm HEX HD SCREW
18	1	686012751	8 X 50mm SOC SET SCREW DOG POINT	**41**	4	686194703	BEARING, PG404420A
19	1	786160508	PIN, LATCH PIVOT	**42**	1	689000213	C-LINKS (1 SET)
20	3	660152699	PROXIMITY SWITCH, KOMBI ROTATION	**-- 42a**	1	689000415	C-LINK, R.H.
-- 20a	3	660152700	CABLE, PROXIMITY SWITCH (not shown)	**-- 42b**	1	689000414	C-LINK, L.H.
21	16	686012695	5 X 10 mm SHF SCREW	**43**	1	786630490	SPACER, C-LINK
22	1 SET	689080283	PULLDOWN GIB SET	**44**	1	686063505	6 X 60mm ROLL PIN
-- 23a	1	689080421	GIB, R.H. PULLDOWN	**45**	2	689160253	PIN, PULLDOWN DRIVE
-- 22b	1	689080420	GIB, L.H. PULLDOWN	**46**	1	686194704	BUSHING, SM. PULLDOWN (PG252820A)
23	4	786012714	12 X 60 mm SHC SCREW	**47**	1	686194707	BUSHING, LG. PULLDOWN (PG404430A)
24	2	686053391	20 X 70mm DOWEL PIN	**48**	1	660152673	SENSOR, OPTICAL
25	1	786220532	COVER, R.H. CLAMPING SPRING	**49**	1	686012742	4 X 16 SLOTTED HD SCREW
26	2	686012732	6 X 10 mm PHILLIPS HD SCREW	**50**	2	686000573	GUIDE, PLASTIC CYLINDER
27	1	686012738	8 X 22 mm SHC SCREW	**51**	2	686012721	6 X 30 mm SHC SCREW
28	1	786000317	NUT, SPLIT CLAMP	**52**	3	686023064	6 mm HEX NUT
29	1	786830530	WASHER, SPRING STACK RETAINING	**53**	1	786000500	FLAG, SENSOR
30	40	689790115	SPRING, CLAMP DISC	**54**	1	786000499	6 X 100 mm THREADED ROD

H. WEISS MACHINERY & SUPPLY

BASIC MECHANICAL - AB1014K

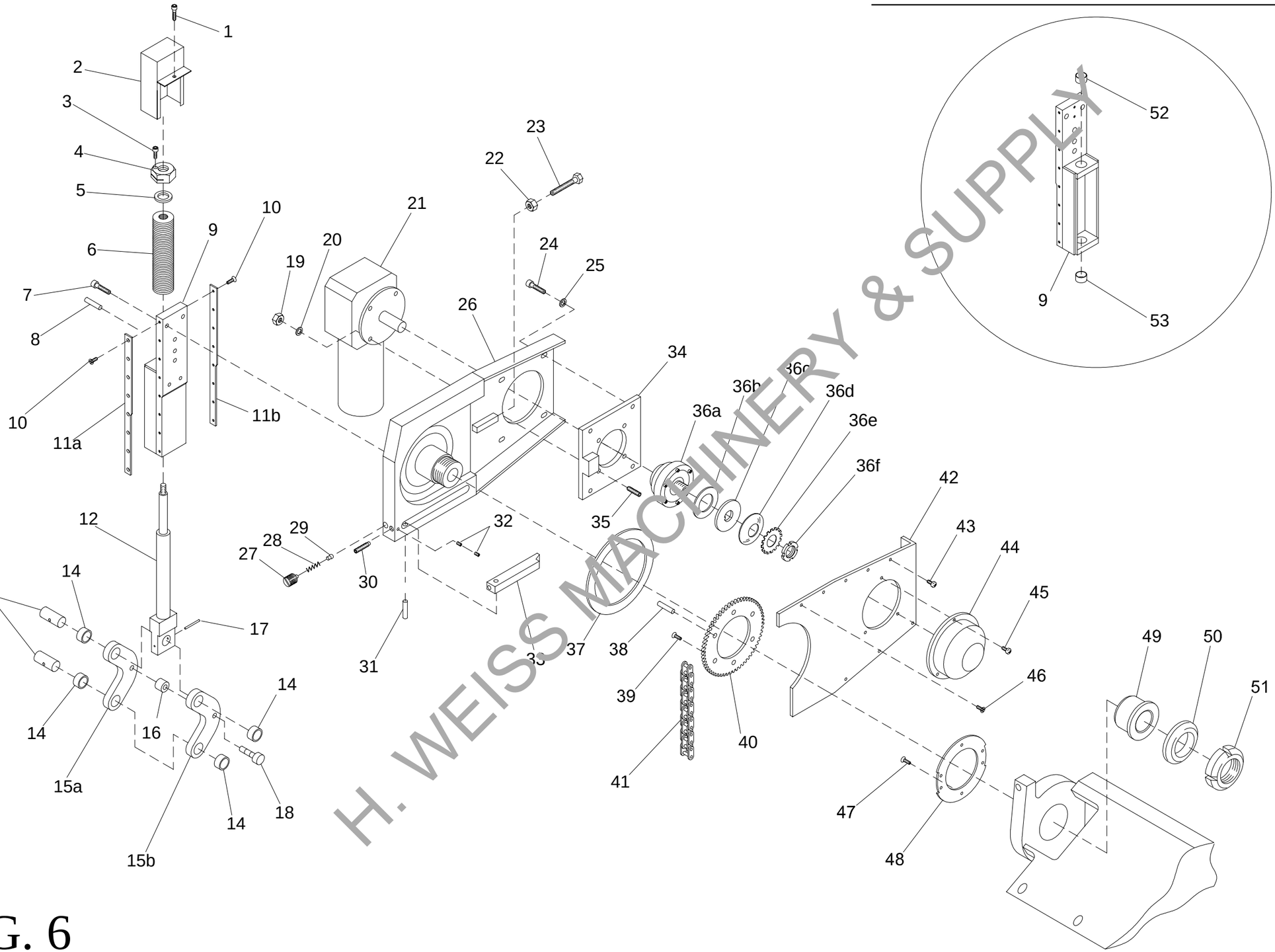

H. WEISS MACHINERY & SUPPLY

FIG. 6

LEFT-HAND KOMBI PULLDOWN ASSEMBLY

ITEM	QTY	RW PART #	RW PART DESCRIPTION	ITEM	QTY	RW PART #	RW PART DESCRIPTION
1	1	686012732	6 X 10 mm PHILLIPS HD SCREW	**26**	1	786080393	PULLDOWN, L.H. KOMBI
2	1	689220323	COVER, L.H. CLAMPING SPRING	**27**	1	786260519	RETAINER, SPRING
3	1	686012738	8 X 22 mm SHC SCREW	**28**	1	686184618	SPRING, LATCH
4	1	786000317	NUT, SPLIT CLAMP	**29**	1	786160520	PIN, ACTUATION
5	1	786830530	WASHER, SPRING STACK RETAINING	**30**	1	686012751	8 X 30mm SOC SET SCREW DOG POINT
6	40	689790115	SPRING, CLAMP DISC	**31**	1	786160508	PIN, LATCH PIVOT
7	5	786012714	12 X 60 mm SHC SCREW	**32**	2	686012752	6 X 6mm SOC SET SCREW
8	2	686053391	20 X 70mm DOWEL PIN	**33**	1	786220384	LATCH, KOMBI LOCKING
9	1	786000354	PULLDOWN WELDMENT	**34**	1	786060395	PLATE, CHAIN TENSION
10	16	686012695	5 X 10 mm SHF SCREW	**35**	4	686012753	10 X 35mm SOC SET SCREW
11	1 SET	689080283	PULLDOWN GIB SET	**36**	1	786940042	KOMBI FRICTION CLUTCH ASSEMBLY
-- 11a	1	689080420	GIB, L.H. PULLDOWN	**-- 36a**	1	786250394	CLUTCH, KOMBI FRICTION
-- 11b	1	689080421	GIB, R.H. PULLDOWN	**-- 36b**	1	786000521	DISC, FRICTION
12	1	689680249	PULLDOWN ROD ASSY	**-- 36c**	1	786060522	PLATE, THRUST
13	2	689160253	PIN, PULLDOWN DRIVE	**-- 36d**	1	786830523	55mmSPRING WASHER
14	4	686194703	BEARING, PG404420A	**-- 36e**	1	686033187	55mm LOCK WASHER (SKF)
15	1	689000213	C-LINKS (1 SET)	**-- 36f**	1	686023068	55mm RETAINING NUT (SKF)
-- 15a	1	689000414	C-LINK, L.H.	**37**	1	786630450	SPACER, FIBER
-- 15b	1	689000415	C-LINK, R.H.	**38**	3	686012757	6 X 20mm FLAT HD SOC SCREW
16	1	786630490	SPACER, C-LINK	**39**	3	686053392	10 X 20mm DOWEL PIN
17	1	686063505	6 X 60mm ROLL PIN	**40**	1	786710400	SPROCKET, KOMBI ROTATION
18	2	686012728	10 X 70 mm HEX HD SCREW	**41**	1	686000540	CHAIN, KOMBI
19	4	686023066	10mm HEX NUT	**42**	1	786440396	GUARD, L.H. PULLDOWN
20	4	686033179	10mm FLAT WASHER	**43**	6	686012754	4 X 6mm PAN HD SCREW
21	1	660011196	MOTOR, KOMBI	**44**	1	786220397	COVER, FRICTION CLUTCH
-- 21a	1	660011249	COMPLETE BRAKE ASSEMBLY	**45**	3	686012755	4 X 8mm ROUND HD SCREW
-- 21b	1	660000496	BRAKE DISC PAD	**46**	2	686012756	4 X 8mm FLAT HD SCREW
-- 21c	1	660000461	BRAKE COIL	**47**	6	686012695	5 X 10mm SHC SCREW
-- 21d	1	660000494	SMALL PLASTIC FAN	**48**	1	786630531	SPACER, L.H. FIBER
-- 21e	1	660011117	RECTIFIER	**49**	1	686194744	BEARING, KOMBI FLANGE
22	1	686023067	16mm HEX NUT	**50**	1	786630524	SPACER. LOCKING NUT
23	1	686012749	16mm X 80mm HEX HD SCREW	**51**	1	786560352	NUT, KOMBI LOCKING
24	4	686012750	10mm X 25mm HEX HD SCREW	**52**	1	686194704	BUSHING, SM. PULLDOWN (PG252820A)
25	4	686033186	10mm FLAT WASHER	**53**	1	686194707	BUSHING, LG. PULLDOWN (PG404430A)

H. WEISS MACHINERY & SUPPLY

BASIC MECHANICAL - AB1014

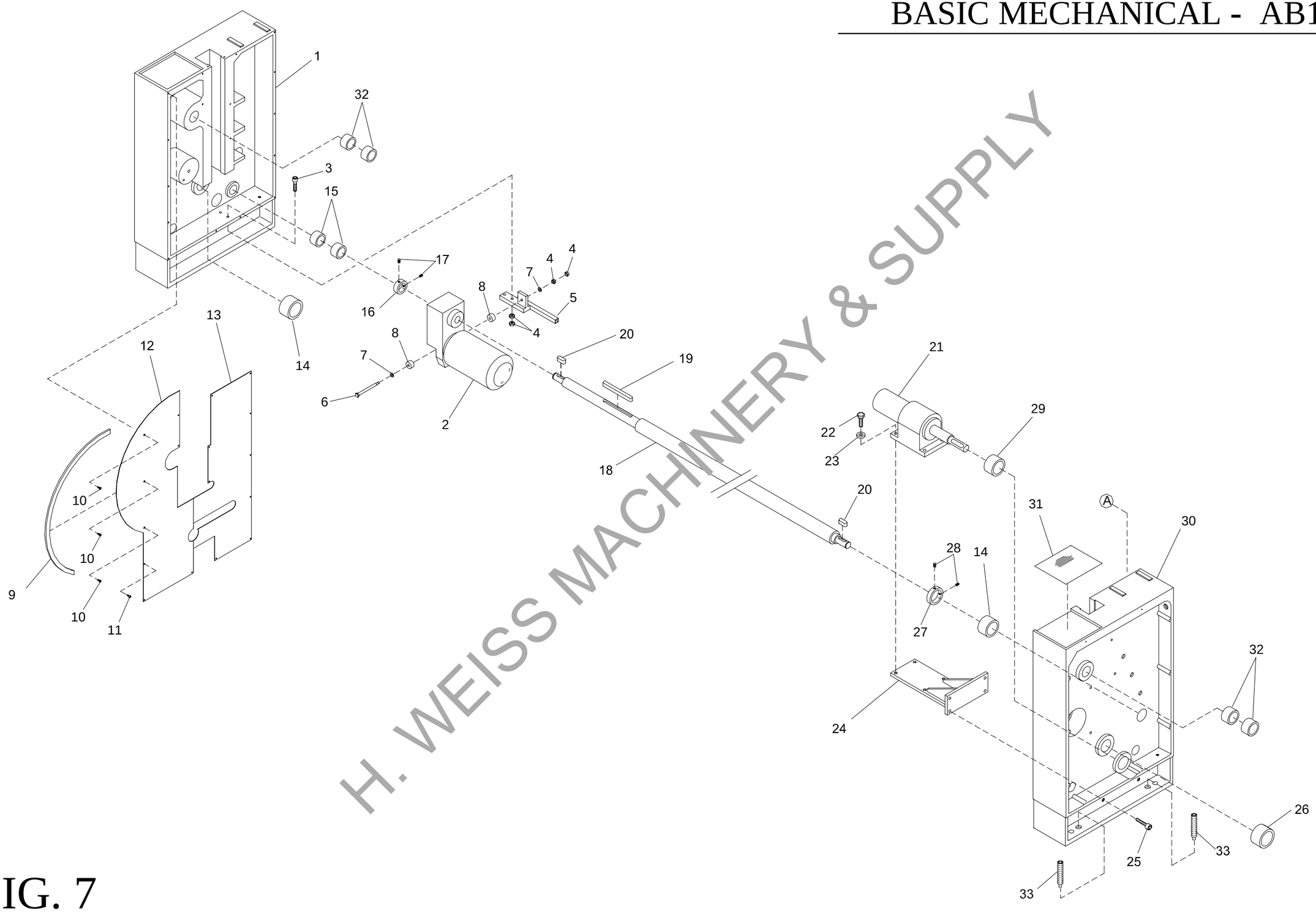

H. WEISS MACHINERY & SUPPLY

FIG. 7

BENDING and CLAMPING

ITEM	QTY	RW PART #	RW PART DESCRIPTION	ITEM	QTY	RW PART #	RW PART DESCRIPTION
1	1	689140146	LEG, L.H.	**18**	1	689680166	SHAFT, BENDING BEAM DRIVE
2	1	660011129	GEAR BRAKE MOTOR, BENDING	**19**	1	786530391	KEY, LARGE
-- 2a	1	660011195	COMPLETE BRAKE ASSEMBLY	**20**	2	786530392	KEY, SMALL
-- 2b	1	660011231	BRAKE DISC PAD	**21**	1	660011130	GEAR BRAKE MOTOR, CLAMPING
-- 2c	1	660000495	BRAKE COIL	**-- 21a**	1	660011195	COMPLETE BRAKE ASSEMBLY
-- 2d	1	660000311	CAST IRON FAN	**-- 21b**	1	660011231	BRAKE DISC PAD
-- 2e	1	660011117	RECTIFIER	**-- 21c**	1	660000495	BRAKE COIL
3	2	686012716	12 X 65 mm SHC SCREW	**-- 21d**	1	660000338	PLASTIC FAN
4	6	686023061	12 mm FULL HEX NUT	**-- 21e**	1	660011117	RECTIFIER
5	1	786180367	SUPPORT, BENDING MOTOR	**22**	4	686012729	12 X 50 mm HEX HD SCREW
6	1	686012717	12 X 100 mm SHC SCREW	**23**	4	686033181	WASHER,FLAT 38mm X 13mm X 5mm
7	2	686033182	13 mm WASHER	**24**	1	786200406	MOUNT, CLAMPING MOTOR
8	2	686000572	DISC, URETHANE	**25**	4	686012718	12 X 40 mm SHC SCREW
9	1	689000119	TRIM, EDGE	**26**	1	686194705	BEARING, GARLOCK PG606540
10	3	686012695	5 X 10 mm PHILLIPS HD FLAT SCREW	**27**	1	689260412	COLLAR, LARGE LOCKING
11	12	686012701	5 X 8 mm PHILLIPS HD PAN SCREW	**28**	2	686012708	10 X 16 mm SOCKET HD SET SCREW
12	1	786220344	COVER, L.H. FRONT LEG	**29**	1	686194706	BEARING, GARLOCK PG657050
13	1	786220345	COVER, L.H. REAR LEG	**30**	1	689140145	LEG, R.H.
14	2	686194699	BEARING, GARLOCK PG606560	**31**	1	786000149	MAT, RUBBER
15	2	686194700	BEARING, GARLOCK PG404450	**32**	4	686194701	BEARING, GARLOCK PG505560
16	1	689260411	COLLAR, SMALL LOCKING	**33**	2	686012682	16 x 50 mm SOC SET SCREW W/DOG POINT
17	2	686012745	10 X 12 mm SOCKET HD SET SCREW				

H. WEISS MACHINERY & SUPPLY

BASIC MECHANICAL - AB1014

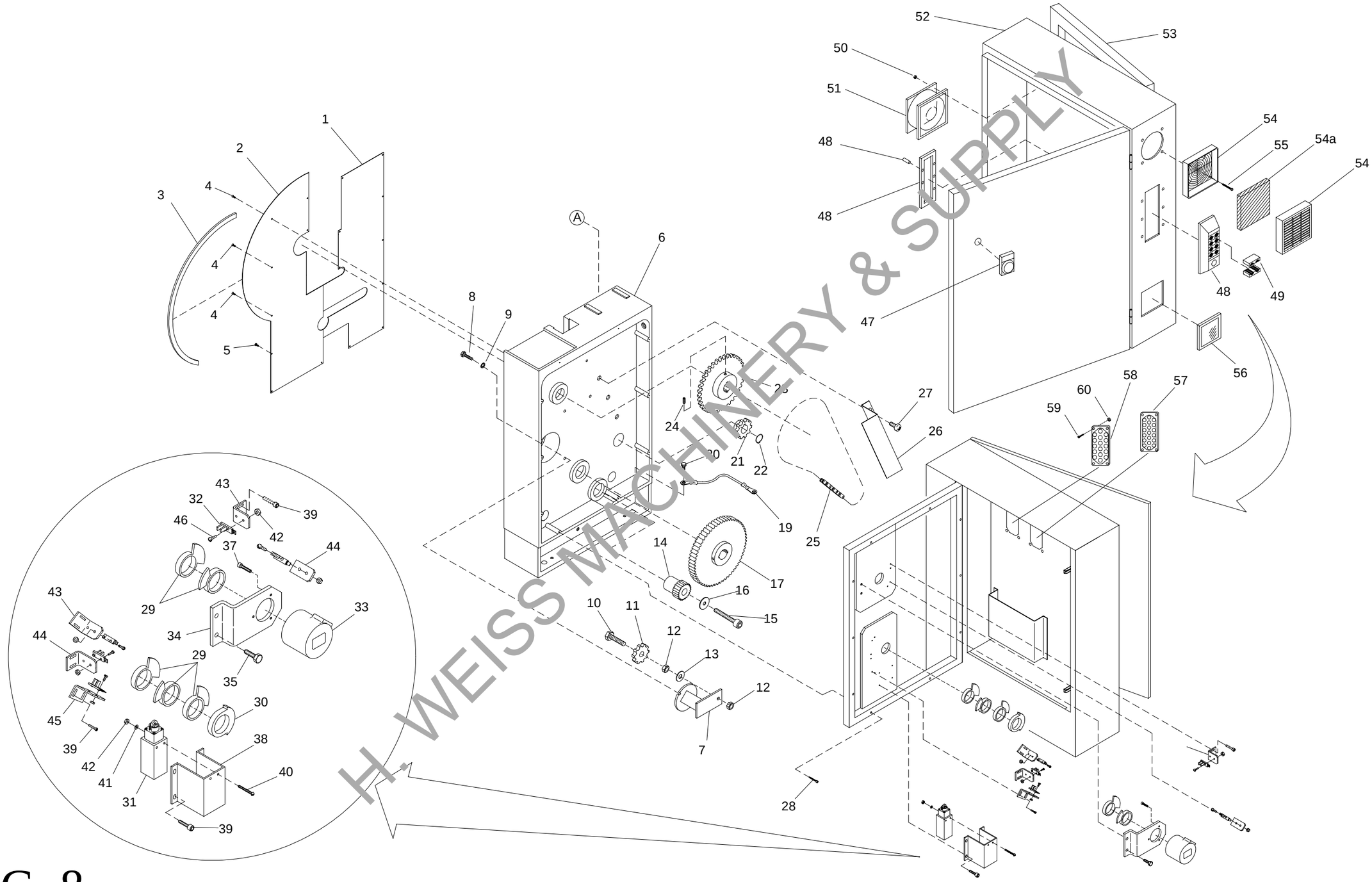

H. WEISS MACHINERY & SUPPLY

FIG. 8

R.H. LEG

ITEM	QTY	RW PART #	RW PART DESCRIPTION	ITEM	QTY	RW PART #	RW PART DESCRIPTION
1	1	786220343	COVER, R.H. REAR LEG	**35**	2	686012734	6 X 8 HEX HD SCREW
2	1	786220342	COVER, R.H. FRONT LEG	**36**	2	686033173	6 mm FLAT WASHER
3	1	689000119	EDGE TRIM	**37**	3	686012744	3 X 8 mm SHC SCREW
4	3	686012699	5 X 10 mm PHILLIPS HD FLAT SCREW	**38**	1	786200533	BRACKET, 6mm SWITCH
5	12	686012700	5 X 8 mm PAN HD SCREW	**39**	14	686012710	4 X 10 mm SHC SCREW
6	1	689140145	R.H. LEG	**40**	2	686012706	4 X 30 mm SLOTTED HD SCREW
7	1	686000413	CHAIN TENSIONER	**41**	2	686033177	4 mm FLAT WASHER
8	1	686012741	16 X 40 mm HEX HD MOUNTING SCREW	**42**	7	686023065	4 mm NYLOCK NUT
9	1	686033183	16 mm LOCK WASHER	**43**	2	786200514	BRACKET, SWITCH SMALL
10	1	786160380	BOLT, IDLER SPROCKET SHOULDER 20mm	**44**	2	786200515	BRACKET, SWITCH MEDIUM
11	1	786710407	SPROCKET, IDLER W/ SPECIAL LOW TOOTH DESIGN	**45**	1	786200516	BRACKET, SWITCH LARGE
12	2	686023063	20 mm JAM NUT	**46**	5	686012742	4 X 16 mm SLOTTED HD SCREW
13	1	686033184	20 mm FLAT WASHER	**47**	1	660031326	DISCONNECT, MAIN POWER COMPLETE WITH (2) 31mm EXTENSIONS
14	1	689380121	GEAR, SMALL PINION CLAMPING 22 TEETH	**48**	1	660000451	CORD GRIP FRAME AND MOUNT CS FRAME 8
15	1	686012739	16 X 40 mm SHC SCREW	**49**	8	660000481	MULTI DIA (2) HOLE CABLE GRIP CS 20W40 (4) SETS OF 2
16	1	786830511	FLAT WASHER SPACER	**50**	4	686023070	4 mm HEX NUT
17	1	689380120	GEAR, LARGE CLAMPING 92 TEETH	**51**	1	660000442	FAN, COOLING 230V PABST 4656N
18	2	686012727	12 X 20 mm SOC HD SET SCREW	**-- 51a**	1	660000455	CORD, ELECTRICAL FAN
19	1	786000404	GROUNDING CABLE	**52**	1	260009655	CABINET, ELECTRICAL CONTROL ORION
20	1	686012701	5 X 8 mm PHILLIPS HD BUTTON SCREW	**53**	1	786200410	MOUNT, CONTROL CABINET
21	1	689710117	SPROCKET, SMALL BENDING	**54**	1	660000441	PLASTIC CASE AND FILTER ELEMENT
22	1	686164336	SNAP RING	**-- 54a**	1	686000514	FILTER ELEMENT ONLY
23	1	689710118	SPROCKET, LARGE BENDING	**55**	4	686012742	4 X 16 mm SLOTTED HD SCREW
24	4	686012740	12 X 30 mm SOC HD SET SCREW	**56**	1	N/A	MESH SCREEN ASSEMBLY
25	1	686000515	CHAIN, BENDING DRIVE	**-- 56a**	1	660000448	INNER MESH SCREEN
26	1	786440379	CHAIN GUARD	**-- 56b**	1	660000447	OUTER MESH SCREEN WITH BLACK PLASTIC FRAME
27	3	686012701	5 X 8 mm PHILLIPS HD SCREW	**-- 56c**	1	660000480	MOUNTING BRACKET ASSEMBLY
28	10	686012702	6 X 16 mm SHC SCREW	**-- 56d**	8	686012766	4 X 8 mm SLOTTED HD SCREW
29	5	786210513	FLAG -- OPTICAL SWITCHES	**-- 56e**	8	686023070	4 mm HEX NUT
30	1	689000164	CAM -- 6mm SAFETY STOP	**57**	1	660000452	16 HOLE CORD GRIP BLOCK (USES CORD GRIP PG-16 660182991)
31	1	660152657	SWITCH, LIMIT -- CLICKER STYLE 6mm SAFETY STOP	**58**	1	660000453	19 HOLE CORD GRIP BLOCK (USES CORD GRIP PG-11 660182954)
32	5	660152673	OPTICAL SWITCH	**59**	8	686012764	8 X 20 mm SCREW
33	1	660000404	ENCODER, INC BENDING GI355.A60C331 3600 PULSE	**60**	4	686023075	8 mm HEX NUT
34	1	786200512	BRACKET, ENCODER MOUNTING				

H. WEISS MACHINERY & SUPPLY

BASIC MECHANICAL - AB1014

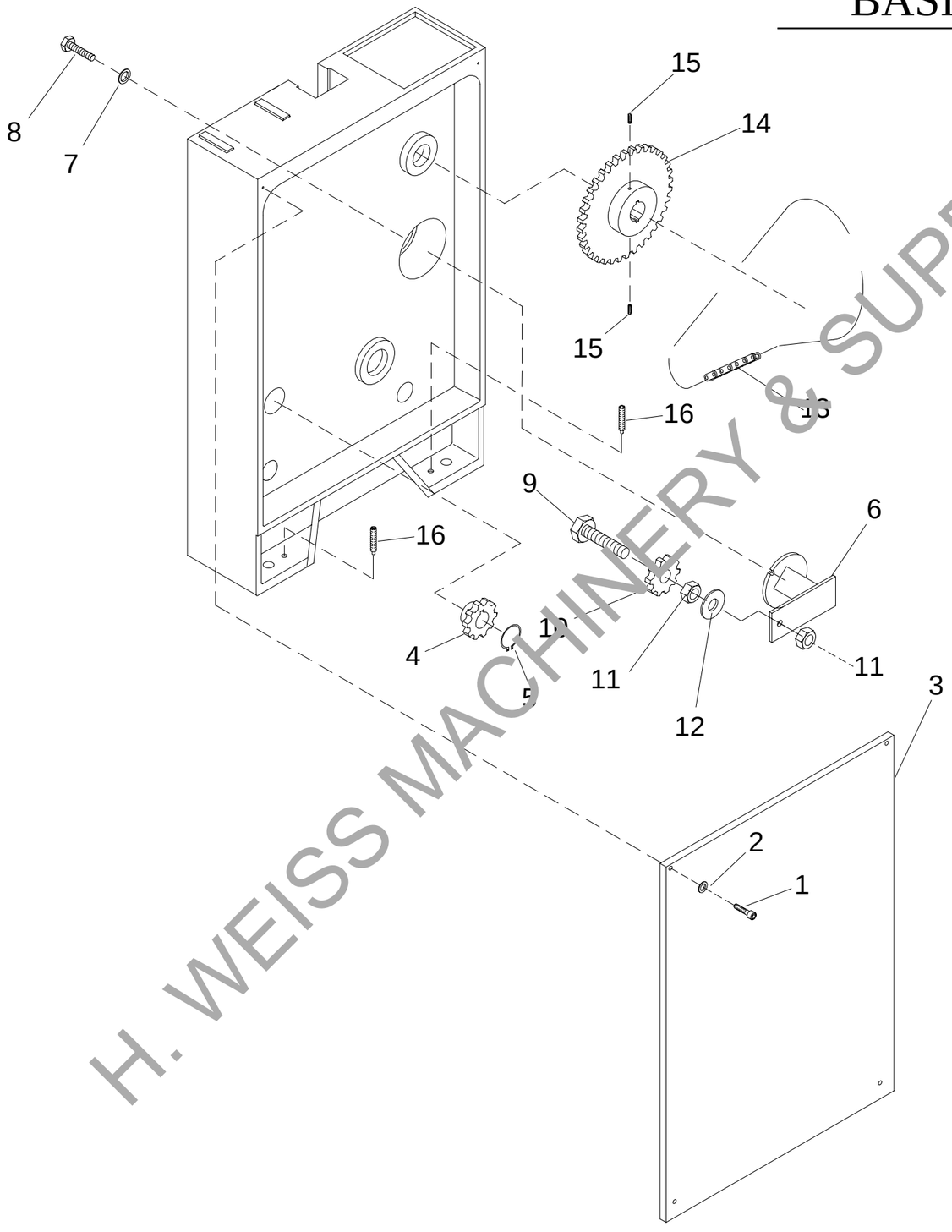

H. WEISS MACHINERY & SUPPLY

FIG. 9

L.H. LEG — OUTSIDE VIEW

ITEM	QTY	RW PART #	RW PART DESCRIPTION
1	4	686012715	6 x 25 mm SOC HD BUTTON SCREW
2	4	686033173	6 mm FLAT WASHER
3	1	689220466	COVER, L.H. OUTSIDE LEG
4	1	689710117	SPROCKET, SMALL BENDING
5	1	686164336	SNAP RING
6	1	686000413	TENSIONER, CHAIN
7	1	686033183	16mm LOCK WASHER
8	1	686012741	16 X 40 mm HEX HD BOLT
9	1	686012804	20 X 50 mm HEX HD BOLT
10	1	686285519	SPROCKET, IDLER
11	2	686023063	20 mm JAM NUTS
12	1	686033184	20 mm FLAT WASHER
13	1	686000515	CHAIN, BENDING DRIVE
14	1	689710118	SPROCKET, LARGE BENDING
15	2	686012740	12 X 30 mm SOC HD SET SCREW
16	2	686012682	16 X 50 mm SOC SET SCREW WITH DOG POINT

H. WEISS MACHINERY & SUPPLY

H. WEISS MACHINERY & SUPPLY

SECTION 2:

ELECTRICAL AND CONTROLS

ORION CONTROL

{TOUCH SCREEN}

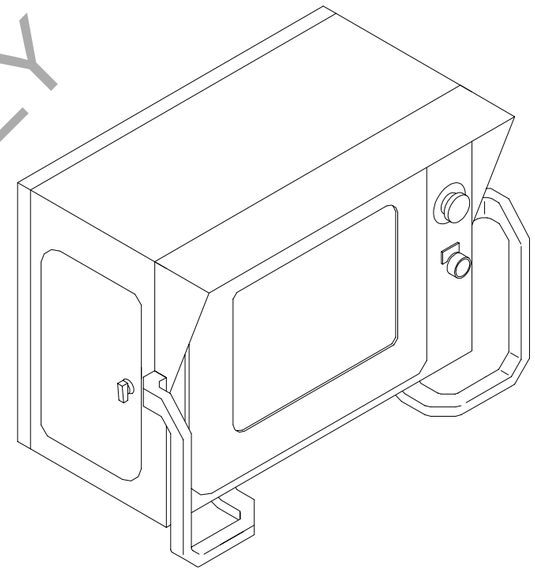

A2000 CONTROL

{5 RED LED DISPLAYS}

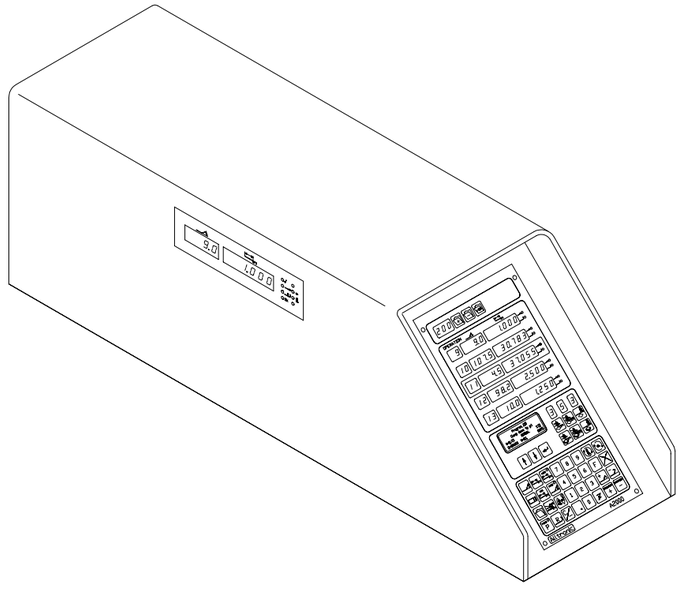

H. WEISS MACHINERY & SUPPLY

ELECTRICAL AND CONTROLS - AB1014

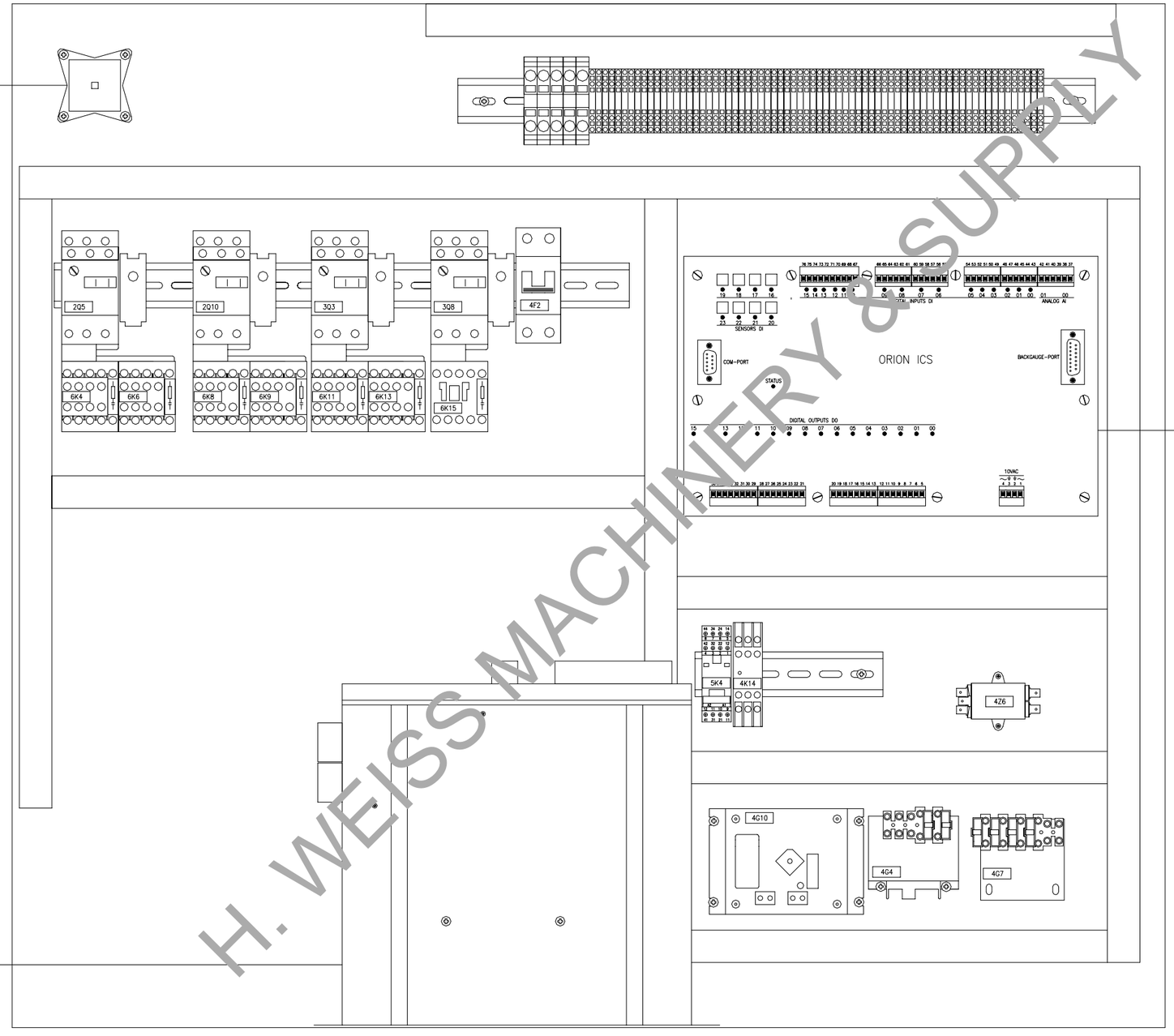

H. WEISS MACHINERY & SUPPLY

FIG. 1

ELECTRICAL PANEL TABLE 1

ITEM	QTY	RW PART #	RW PART DESCRIPTION
1	1	660011230	BACKGAUGE SERVO DRIVE

ICS FOR ORION AND A2000 MACHINES

ITEM	QTY	RW PART #	RW PART DESCRIPTION
2 - ORION CONTROL	1	660233464	ORION ICS
2 - A2000 CONTROL	1	660233455	A2000 ICS

NOT PICTURED — CABLES CONNECTING TO BACKGAUGE SERVO DRIVE

ITEM	QTY	RW PART #	RW PART DESCRIPTION
N/A	1	660000471	POWER CABLE
N/A	1	660000450	RESOLVER CABLE

H. WEISS MACHINERY & SUPPLY

ELECTRICAL AND CONTROLS - AB1014

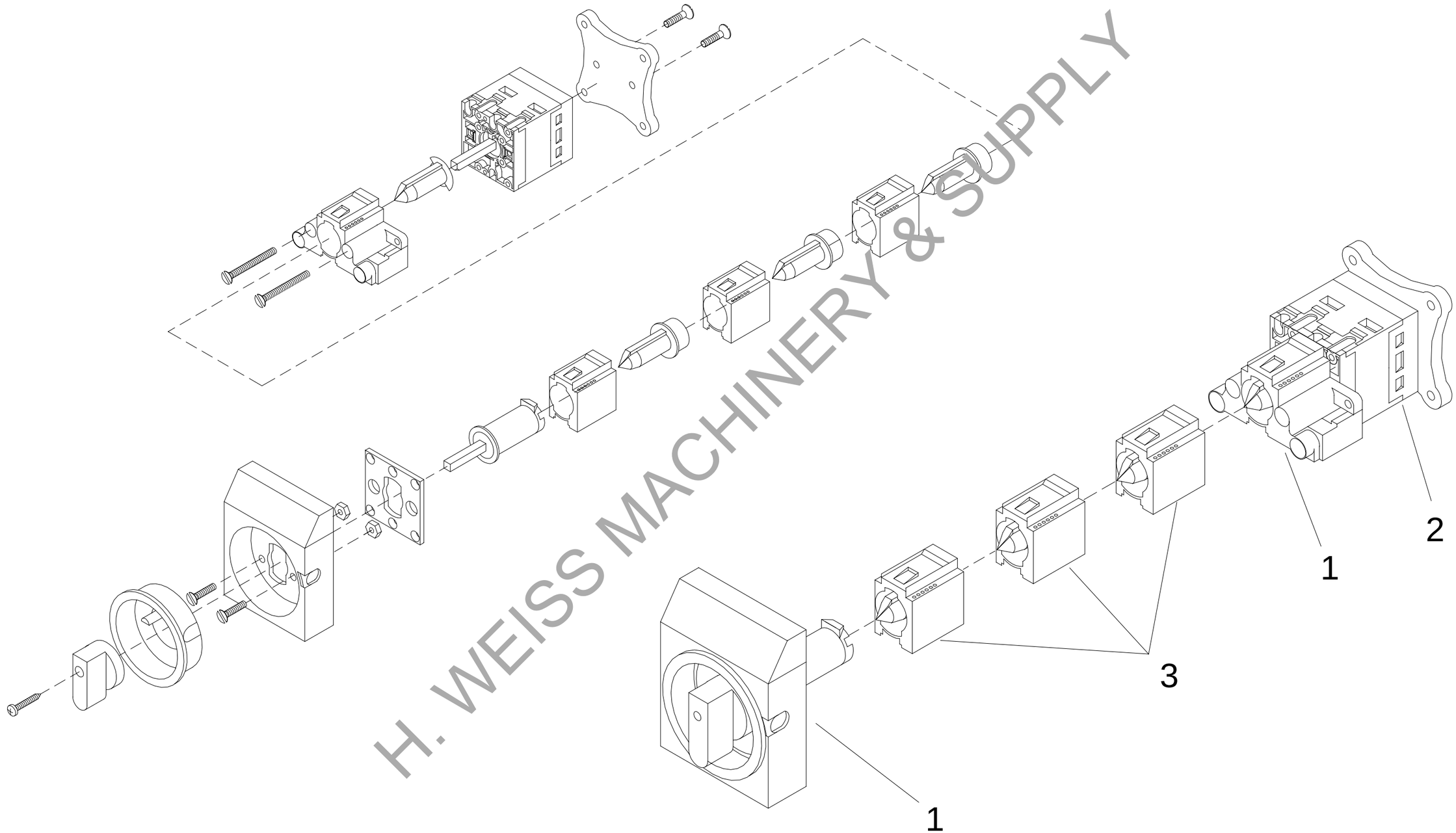

H. WEISS MACHINERY & SUPPLY

FIG. 2

ELECTRICAL PANEL TABLE 2

660031326 — COMPLETE SWITCH

ITEM	QTY	RW PART #	RW PART DESCRIPTION
1	1	660031334	FRONT FACE KIT
2	1	660031331	SWITCH WITH BASE
3	3	660031337	31mm EXTENSION

H. WEISS MACHINERY & SUPPLY

ELECTRICAL AND CONTROLS - AB1014

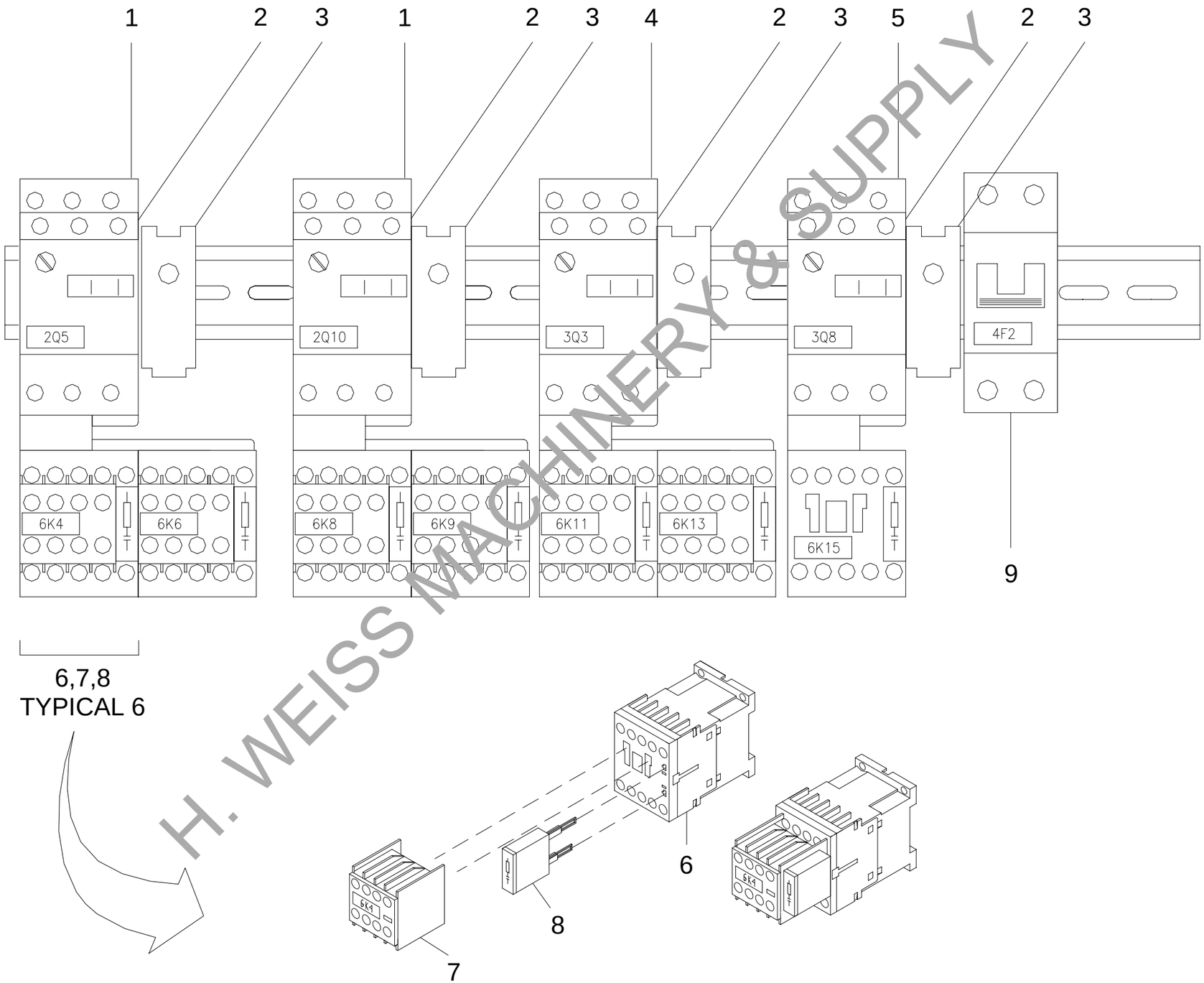

H. WEISS MACHINERY & SUPPLY

FIG. 3

ELECTRICAL PANEL TABLE 3

ITEM	QTY	RW PART #	RW PART DESCRIPTION
1	2	660041574	OVERLOAD 9-12 AMP
2	4	660021342	AUXILIARY CONTACT 1 NO/ 1 NC
3	4	660000478	RC FILTER
4	1	660041578	OVERLOAD 2.2-3.2 AMP
5	1	660041577	OVERLOAD 1.1-1.6 AMP
6	7	660021310	CONTACTOR
7	6	660021345	AUXILLARY CONTACT 1 NO/ 1 NC
8	7	660000429	RC SUPPRESSOR
9	1	660041590	CIRCUIT BREAKER, 10 AMP 2 POLE

H. WEISS MACHINERY & SUPPLY

ELECTRICAL AND CONTROLS - AB1014

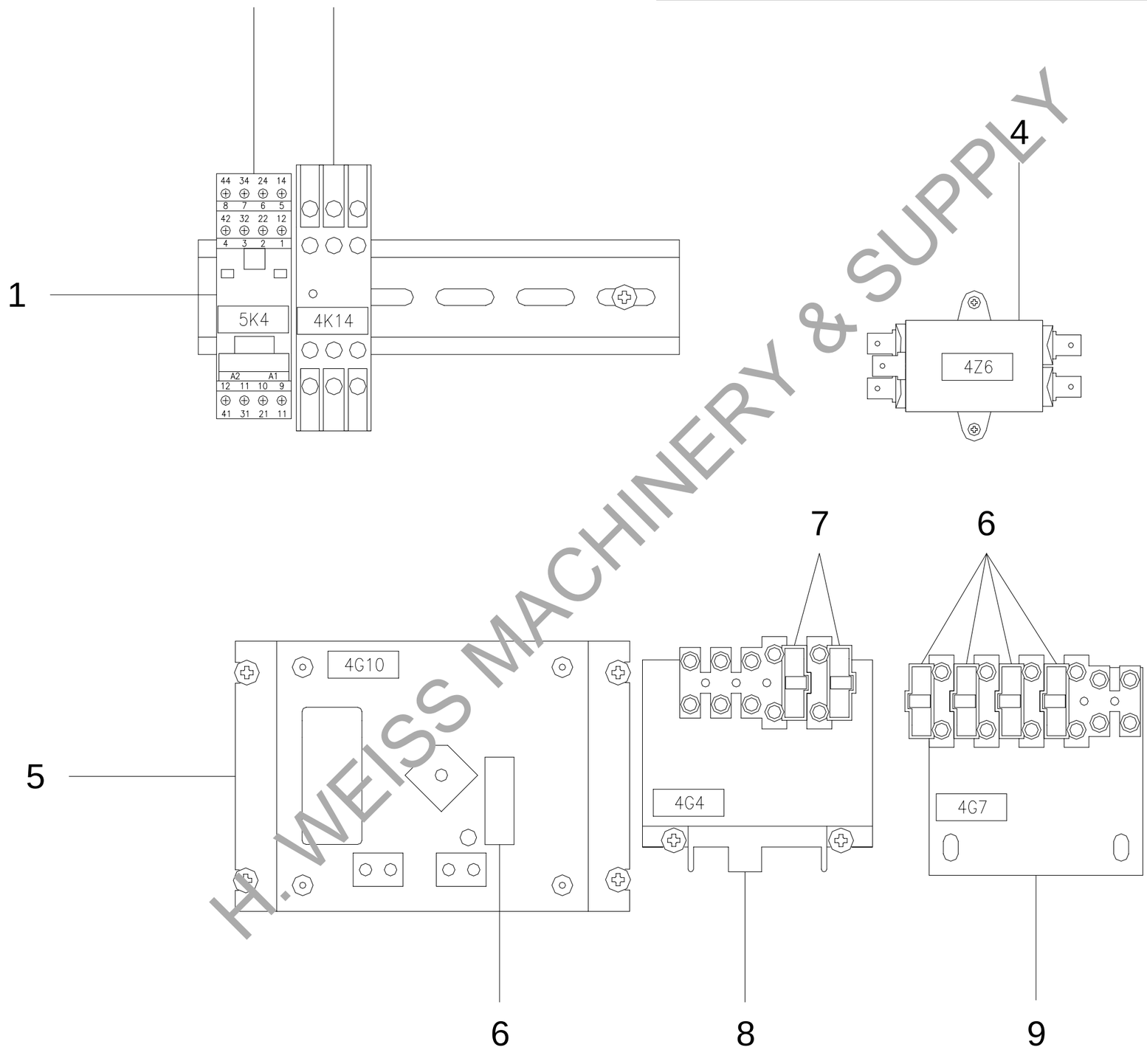

H. WEISS MACHINERY & SUPPLY

FIG. 4

ELECTRICAL PANEL TABLE 4

ITEM	QTY	RW PART #	RW PART DESCRIPTION
1	1	660142602	RELAY - 4DPT 24VDC
2	1	660142616	RELAY SOCKET
3	1	660142604	SAFETY RELAY
4	1	660000396	FILTER
5	1	660132486	POWER SUPPLY 24VDC
6	5	660051764	FUSE 2.5A
7	2	660051765	FUSE 3.15A
8	1	660132492	TRANSFORMER - 230V PRI/24V SEC
9	1	660132493	TRANSFORMER - 230V PRI/10.5V SEC

H. WEISS MACHINERY & SUPPLY

ELECTRICAL AND CONTROLS - AB1014

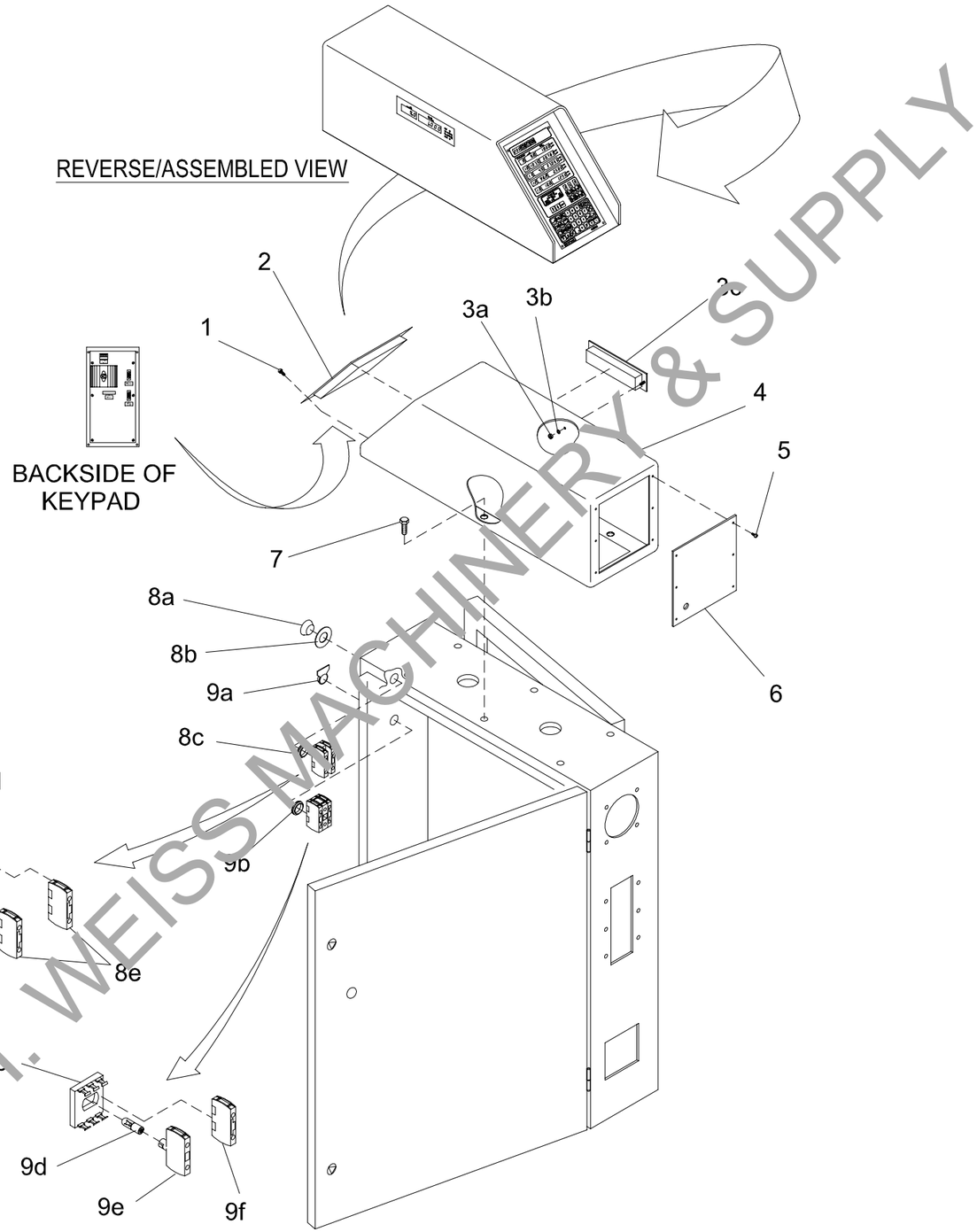

H. WEISS MACHINERY & SUPPLY

FIG. 5

A2000 CONTROL

ITEM	QTY	RW PART #	RW PART DESCRIPTION
1	4	686012771	5 X 10mm BUTTON HD STRAIGHT SLOT SCREW
2	1	660233456	KEYPAD
3	1	660233457	SIDE DISPLAY - COMPLETE
- 3a	2	686023070	4mm HEX NUT
- 3b	2	686033177	4mm FLAT WASHER
- 3c	1	N/A	SIDE DISPLAY
4	1	689000463	TOP ENCLOSURE
5	6	686012754	4 X 6mm PAN HEAD PHILLIPS SCREW
6	1	689000464	REAR PLATE
7	6	686012703	6 X 10mm HEX HD SCREW
8	1	660082141	EMERGENCY STOP BUTTON - COMPLETE
- 8a	1	N/A	SWITCH KNOB
- 8b	1	N/A	EMERGENCY STOP LABEL
- 8c	1	N/A	LOCKING NUT
- 8d	1	N/A	CONTACT BLOCK HOLDER
- 8e	2	660082142	CONTACT BLOCK NORMALLY CLOSED
9	1	660082143	POWER BUTTON - COMPLETE
- 9a	1	N/A	SWITCH W/ NAMEPLATE
- 9b	1	N/A	LOCKING NUT
- 9c	1	N/A	CONTACT BLOCK HOLDER
- 9d	1	660082063	130 V LAMP
- 9e	1	660082144	LAMP HOLDER
- 9f	2	660082163	CONTACT BLOCK NORMALLY OPEN

H. WEISS MACHINERY & SUPPLY

ELECTRICAL AND CONTROLS - AB1014

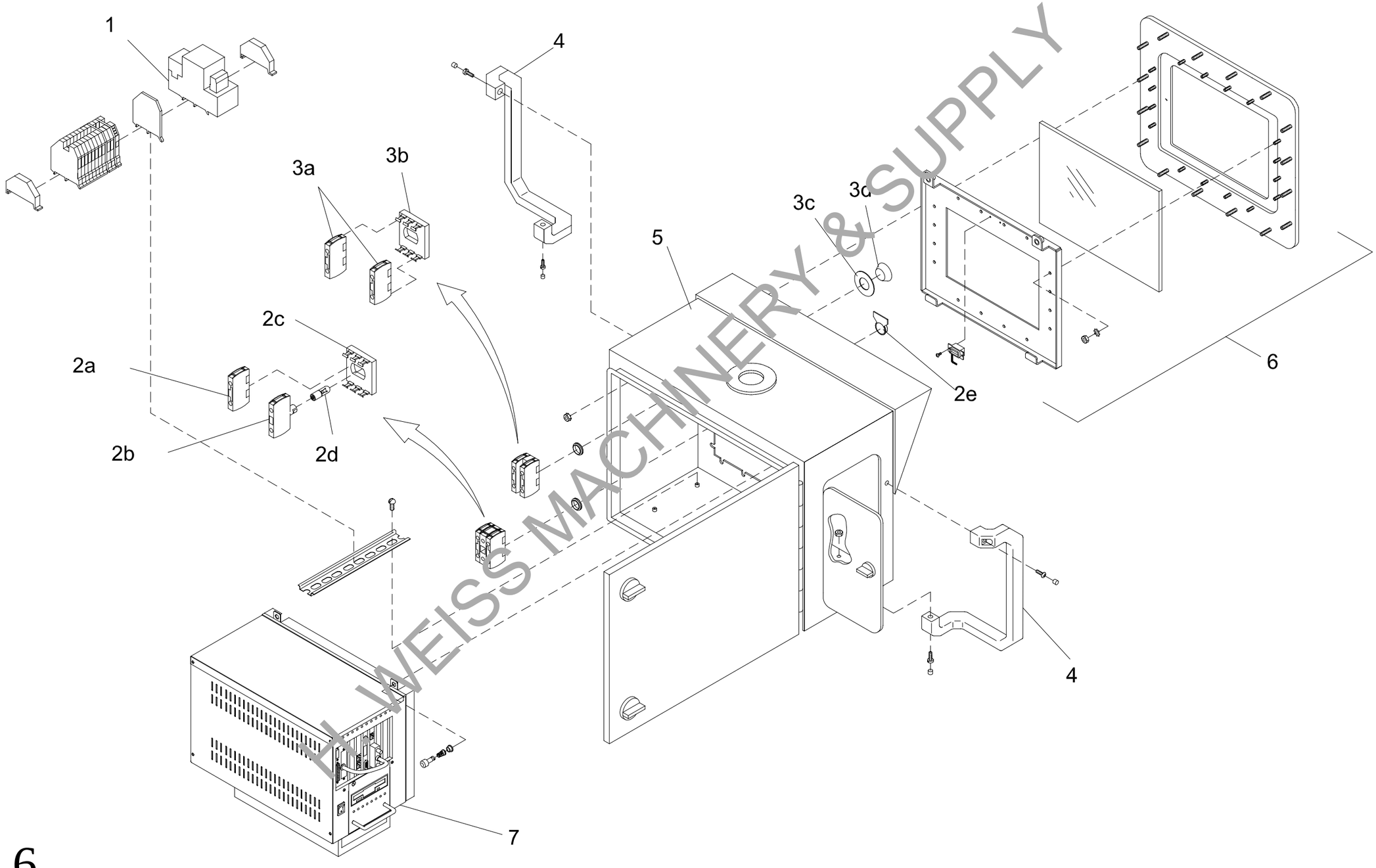

H. WEISS MACHINERY & SUPPLY

FIG. 6

ORION CONTROL

660233476 - ENCLOSURE COMPLETE

ITEM	QTY	RW PART #	RW PART DESCRIPTION
1	1	N/A	SURGE SUPPRESSOR
2	1	660082143	POWER BUTTON - COMPLETE
- 2a	1	660082163	CONTACT BLOCK NORMALLY OPEN
- 2b	1	660082144	LAMP HOLDER
- 2c	1	N/A	CONTACT BLOCK HOLDER
- 2d	1	660082063	130 V LAMP
- 2e	1	N/A	SWITCH W/ NAMEPLATE
3	1	660082141	EMERGENCY STOP BUTTON - COMPLETE
- 3a	2	660082142	CONTACT BLOCK NORMALLY CLOSED
- 3b	1	N/A	CONTACT BLOCK HOLDER
- 3c	1	N/A	EMERGENCY STOP LABEL
- 3d	1	N/A	SWITCH KNOB
4	1	660182983	HANDLE SET
5	1	N/A	ENCLOSURE
6	1	660232480	BEZEL

660233477 - COMPUTER

ITEM	QTY	RW PART #	RW PART DESCRIPTION
7	1	660233477	COMPUTER

H. WEISS MACHINERY & SUPPLY

ELECTRICAL AND CONTROLS - AB1014

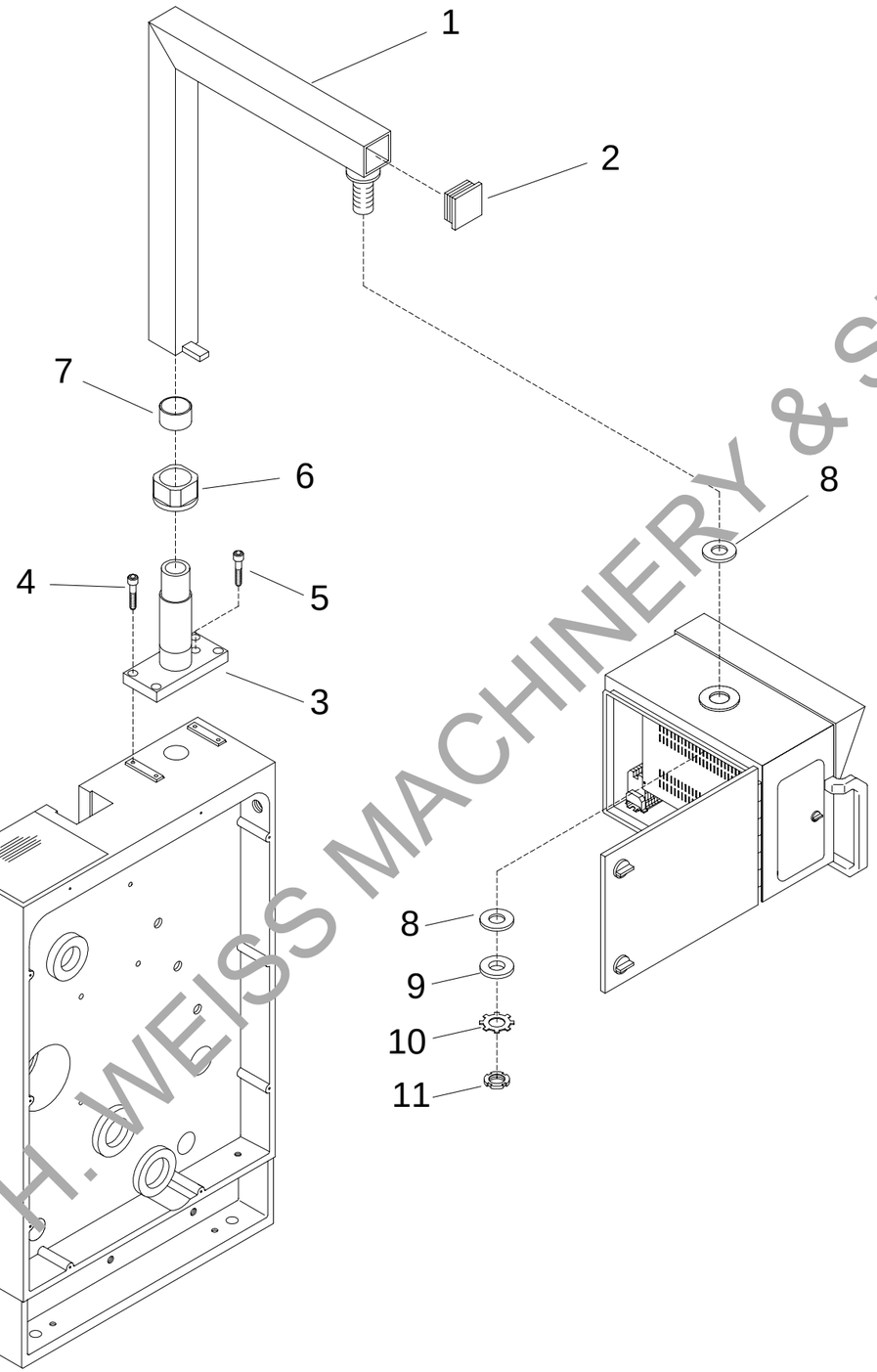

H. WEISS MACHINERY & SUPPLY

FIG. 7

ORION PENDANT ARM ASSEMBLY

ITEM	QTY	RW PART #	RW PART DESCRIPTION
1	1	689030314	PENDANT ARM WELDMENT
2	1	689220413	CAP, BLACK PLASTIC SQUARE
3	1	689060315	MOUNT, PENDANT ARM SWIVEL
4	4	686012746	10 X 30 mm SHC SCREW
5	1	686012747	12 X 20 mm SHC SCREW
6	1	689190465	PENDANT ARM LOWER BASE BUSHING
7	1	686194747	PENDANT ARM UPPER BEARING (PG505540A)
8	2	689000307	NYLON WASHER
9	1	689000308	STEEL WASHER
10	1	689000309	STAR WASHER
11	1	689000310	SPANNER NUT

H. WEISS MACHINERY & SUPPLY

ELECTRICAL AND CONTROLS - AB1014

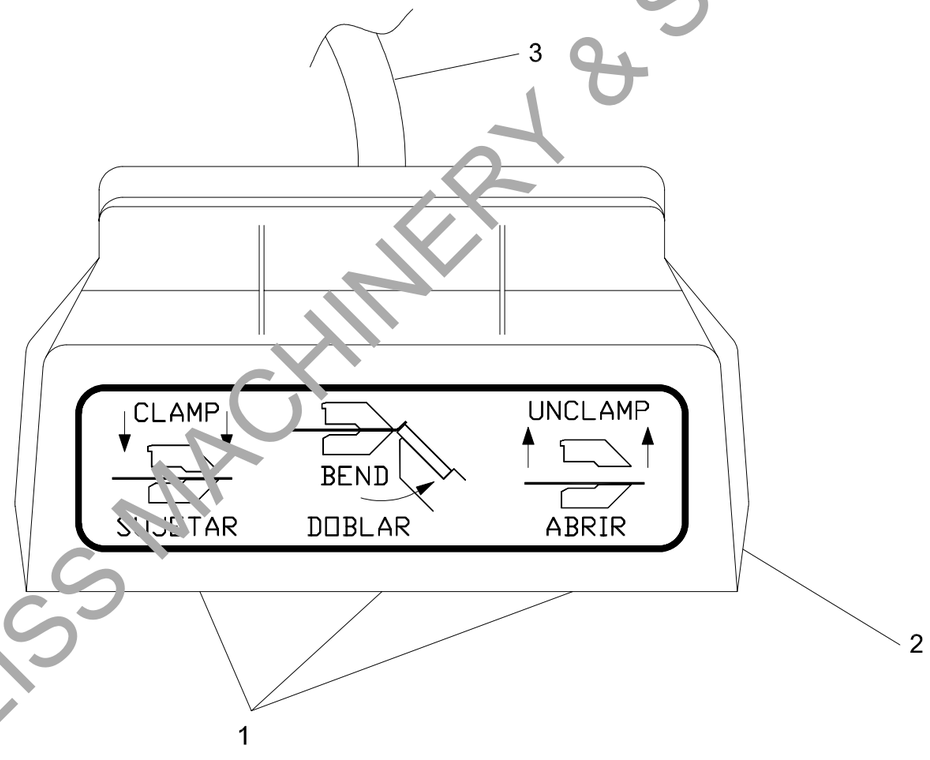

H. WEISS MACHINERY & SUPPLY

FIG. 8

3-PEDAL FOOT SWITCH

P/N: 660092109

ITEM	QTY	RW PART #	RW PART DESCRIPTION
1	3	660092110	REPLACEMENT SWITCH
2	1	660092117	REPLACEMENT TOP SHROUD
3	1	660000376	FOOT SWITCH CABLE
	NOTE: ALWAYS MACHINE LENGTH PLUS 4 FT.		

H. WEISS MACHINERY & SUPPLY

H. WEISS MACHINERY & SUPPLY

SECTION 3:

BACKGAUGE

DIVISIONS:

39” AIR

61” AIR

61” W/O AIR

H. WEISS MACHINERY & SUPPLY

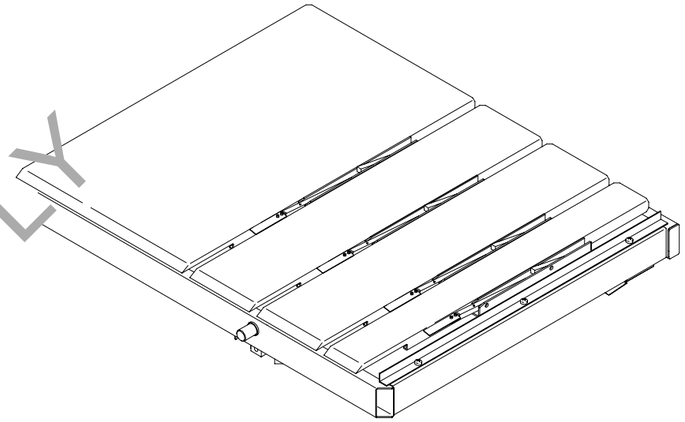

40" AIR-OPERATED

{2 FINGERS ONLY + AIR REGULATOR}

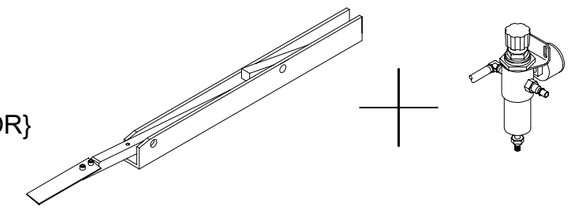

61" AIR-OPERATED

{2 FINGERS + FIXED STOP + AIR REGULATOR}

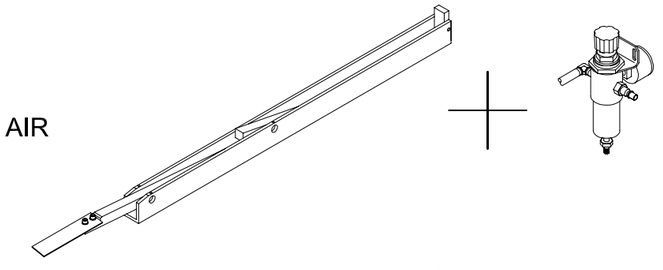

61" ELECTRIC OPERATED

{2 FINGERS + FIXED STOP WITHOUT AIR REGULATOR}

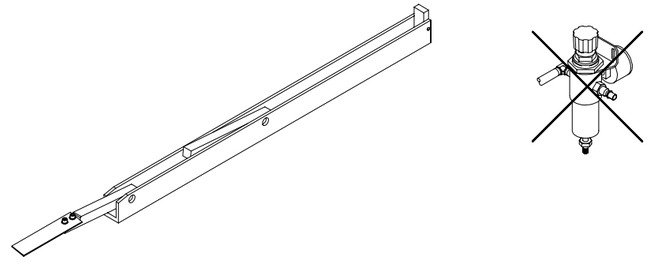

39” AIR BACKGAUGE - AB1014

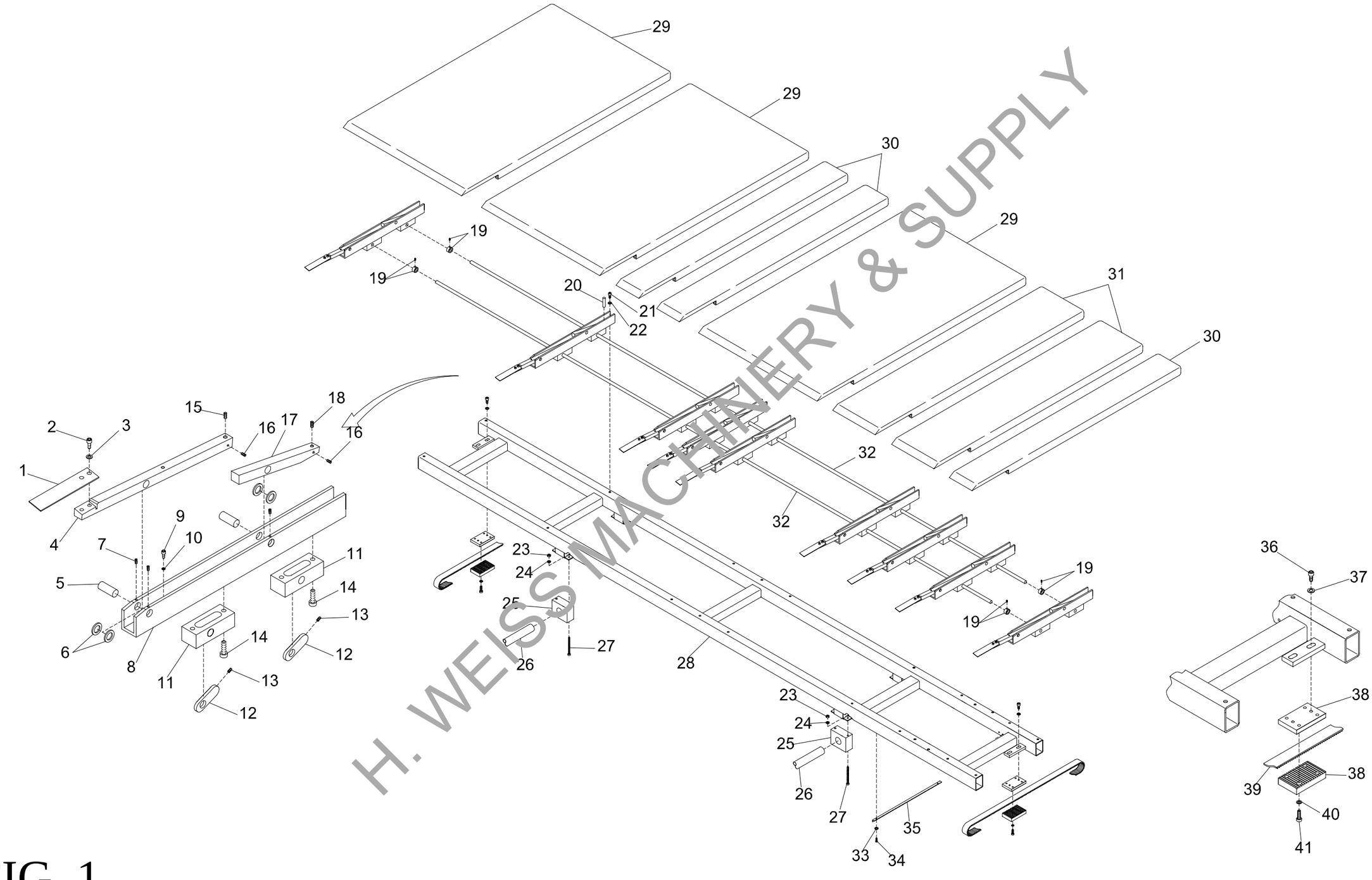

H. WEISS MACHINERY & SUPPLY

FIG. 1

TOP CARRIAGE ASSEMBLY

ITEM	QTY	RW PART #	RW PART DESCRIPTION	ITEM	QTY	RW PART #	RW PART DESCRIPTION
1	9	689120126	FINGER, BACKGAUGE SPRING STEEL	**22**	9	686033175	8mm FLAT WASHER
2	18	686012675	6 X 10mm SHC LOW HD SCREW	**23**	8	686023071	6mm NYLOCK HEX NUT
3	18	686033173	6mm FLAT WASHER	**24**	8	686033173	6mm FLAT WASHER
4	9	689360297	FRONT FINGER HOLDER	**25**	4	689030427	GUIDE ROD BLOCK
5	18	689160429	FINGER PIN	**26**	2	689030426	30mm GUIDE ROD
6	36	689830298	BLACK PLASTIC WASHER	**27**	8	686012763	6 X 80mm SOC HD CAP SCREW
7	27	686012759	3 X 4mm SOC SET SCREW	**28**	1	689040444	UPPER CARRIAGE WELDMENT
8	9	689010428	ALUMINUM FINGER GUIDE/HOLDER	**29**	3	689220263	LARGE COVER
9	9	686012760	8 X 12mm SHC LOW HD SCREW	**30**	3	689220432	SMALL COVER
10	9	686033175	8mm FLAT WASHER	**31**	2	689220433	MEDIUM COVER
11	18	689130430	NYLON FINGER MOUNT BLOCK	**32**	2	689030425	12mm B.G. FINGER GUIDE ROD
12	18	689210431	CAM	**33**	2	686033178	5mm FLAT WASHER
13	18	686012705	6 X 12mm SET SCREW	**34**	2	686012711	5 X 10mm SOC HD CAP SCREW
14	36	686012725	6 X 25mm SOC HD CAP SCREW	**35**	1	689450434	B.G. HOME SWITCH RAIL
15	9	686012762	6 X 16mm SET SCREW	**36**	4	686012764	8 X 20mm SOC HD CAP SCREW
16	18	686012759	3 X 4mm SET SCREW	**37**	4	686033175	8mm FLAT WASHER
17	9	689360445	SOLID FINGER	**38**	2	689010446	BELT CLAMP, TOP AND BOTTOM SET
18	9	686012705	6 X 12mm SET SCREW	**39**	2	689100424	BELT
19	4	686000598	COLLAR WITH SET SCREW	**40**	8	686033175	8mm WASHER
20	9	686063506	5 X 15mm ROLL PIN	**41**	8	686012713	8 X 25mm SOC HD CAP SCREW
21	9	686012760	8 X 12mm SHC LOW HD SCREW				

H. WEISS MACHINERY & SUPPLY

39” AIR BACKGAUGE - AB1014

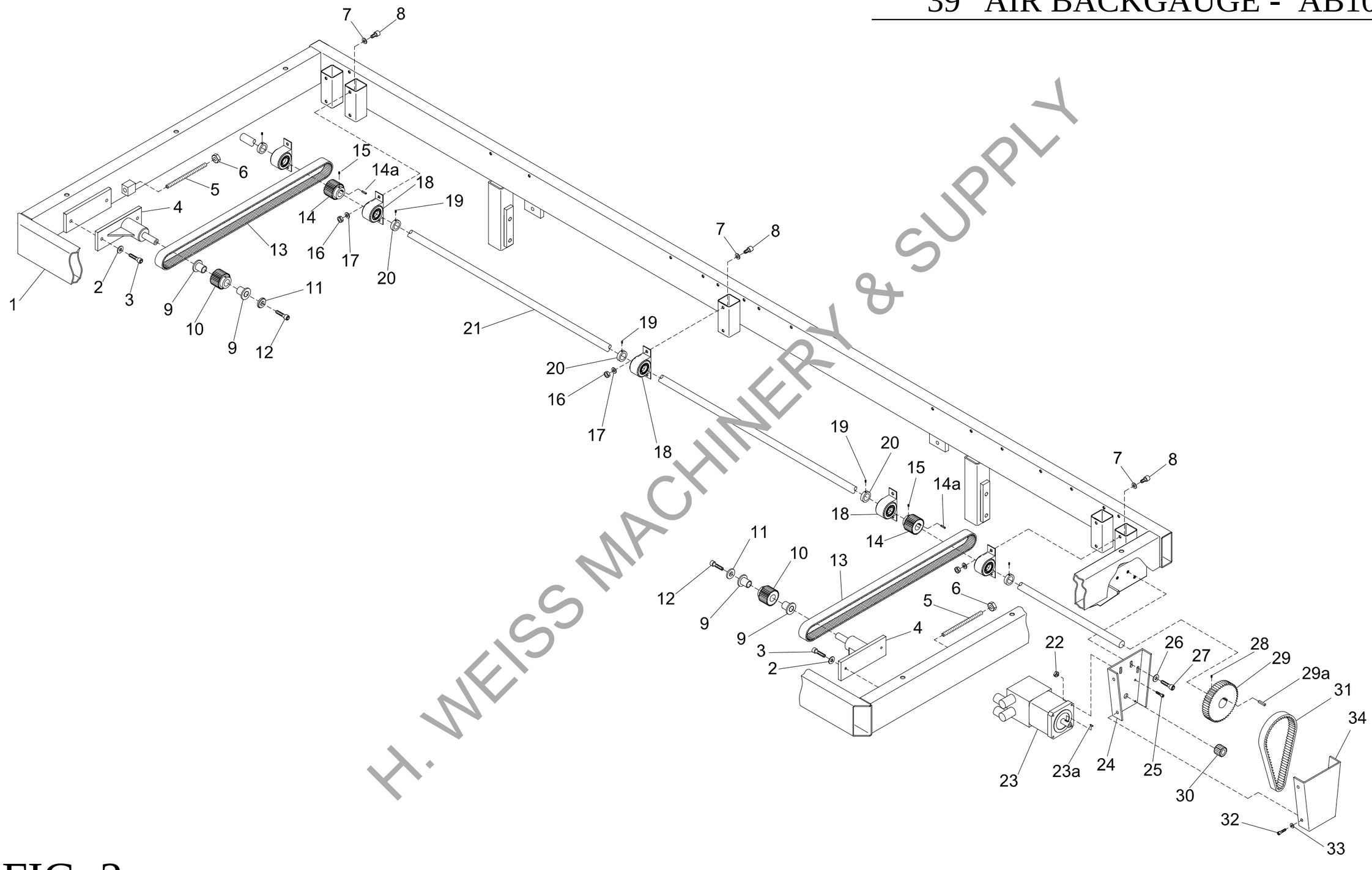

H. WEISS MACHINERY & SUPPLY

FIG. 2

BELT DRIVE SYSTEM ASSEMBLY

ITEM	QTY	RW PART #	RW PART DESCRIPTION	ITEM	QTY	RW PART #	RW PART DESCRIPTION
1	1	689140435	BACKGAUGE FRAME - MAIN WELDMENT	**18**	5	686204472	BEARING SKF P-47-20-FJ
2	2	686033175	8mm FLAT WASHER	**19**	5	686012705	6 X 12mm SOC SET SCREW
3	2	686012764	8 X 20mm SOC HD CAP SCREW	**20**	5	686000699	STOP COLLAR
4	2	689180440	IDLER DRIVE MOUNT	**21**	1	689680441	DRIVESHAFT
5	2	689030461	5 X 50mm THREADED ROD	**22**	4	686020074	5mm HEX NUT
6	2	686020073	5mm JAM HEX NUT	**23**	1	660011197	SERVO MOTOR
7	3	686033175	8mm FLAT WASHER	**24**	1	689200442	MOTOR MOUNTING BRACKET
8	3	686012765	8 X 16mm SOC HD CAP SCREW	**25**	4	686012719	5 X 20mm SOC HD CAP SCREW
9	4	686194745	FLANGE BUSHING	**26**	3	686033175	8mm FLAT WASHER
10	2	689710448	IDLER SPROCKET	**27**	3	686012765	8 X 16mm SOC HD CAP SCREW
11	2	686033189	5mm THICK WASHER, 26mm O.D. , 9mm I.D.	**28**	1	686012748	5 X 10mm SOC SET SCREW
12	2	686012765	8 X 16mm SOC HD CAP SCREW	**29**	1	689710390	UPPER SPROCKET, 72 TOOTH
13	2	689100424	WHITE NYLON BELT	**30**	1	689710389	SMALL MOTOR SPROCKET, 18 TOOTH
14	2	689710447	DRIVE SPROCKET	**31**	1	689100343	BLACK DRIVE BELT, GOODYEAR 5m 565 4mm WIDE
15	2	686012730	5 X 5mm SET SCREW	**32**	3	686012711	5 X 10mm SOC HD CAP SCREW
16	5	686023075	8mm HEX NUT	**33**	3	686033178	5mm FLAT WASHER
17	5	686033175	8mm FLAT WASHER	**34**	1	689220443	DRIVE BELT COVER

H. WEISS MACHINERY & SUPPLY

39” AIR BACKGAUGE - AB1014

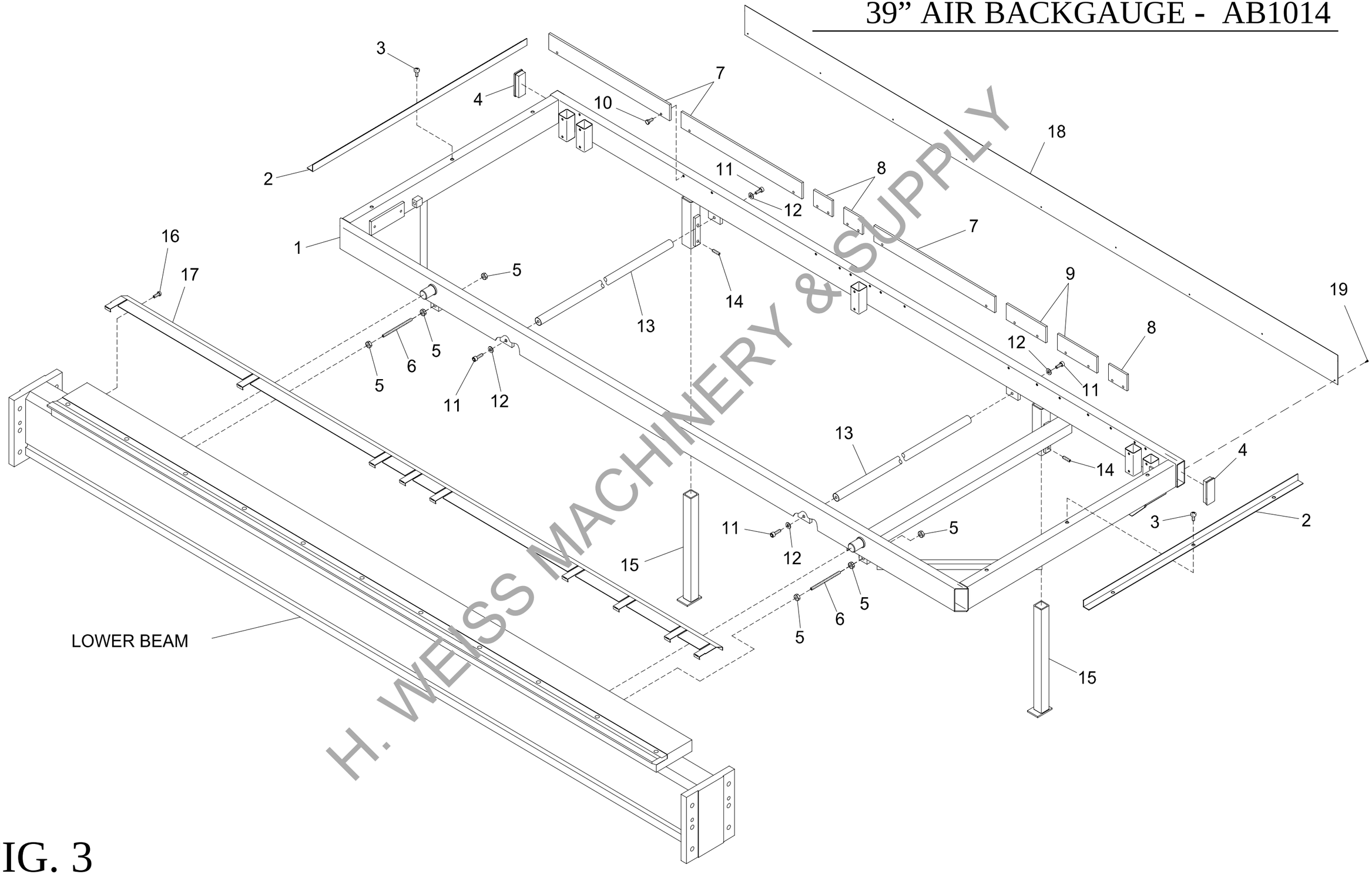

H. WEISS MACHINERY & SUPPLY

FIG. 3

FIXED BACK GAUGE TABLE ASSEMBLY

ITEM	QTY	RW PART #	RW PART DESCRIPTION
1	1	689140435	BACKGAUGE FRAME - MAIN WELDMENT
2	2	689450436	RAIL
3	6	686012701	5 X 8mm BUTTON HD PHILLIPS SCREW
4	2	686000545	PLASTIC END CAP
5	6	686022072	12mm JAM NUT
6	2	686012768	12 X 80mm FULL DOG POINT SET SCREW
7	3	689200437	REAR SUPPORT, LONG
8	3	689200439	REAR SUPPORT, SMALL
9	2	689200438	REAR SUPPORT, MEDIUM
10	16	686012703	6 X 10mm HEX HD SCREW
11	4	686012676	12 X 35mm SOC HD CAP SCREW
12	4	686033182	13mm FLAT WASHER
13	2	689030426	BACKGAUGE GUIDE SHAFT
14	4	686012[illegible]27	12 X 20mm SOC SET SCREW
15	2	786149423	ADJUSTABLE SUPPORT LEG
16	7	686012701	5 X 8mm BUTTON HD PHILLIPS SCREW
17	1	783440000	BACKGAUGE FINGER RAMP
18	1	689220536	REAR COVER
19	9	686012703	6 X 10mm HEX HEAD SCREW

H. WEISS MACHINERY & SUPPLY

39” AIR BACKGAUGE - AB1014

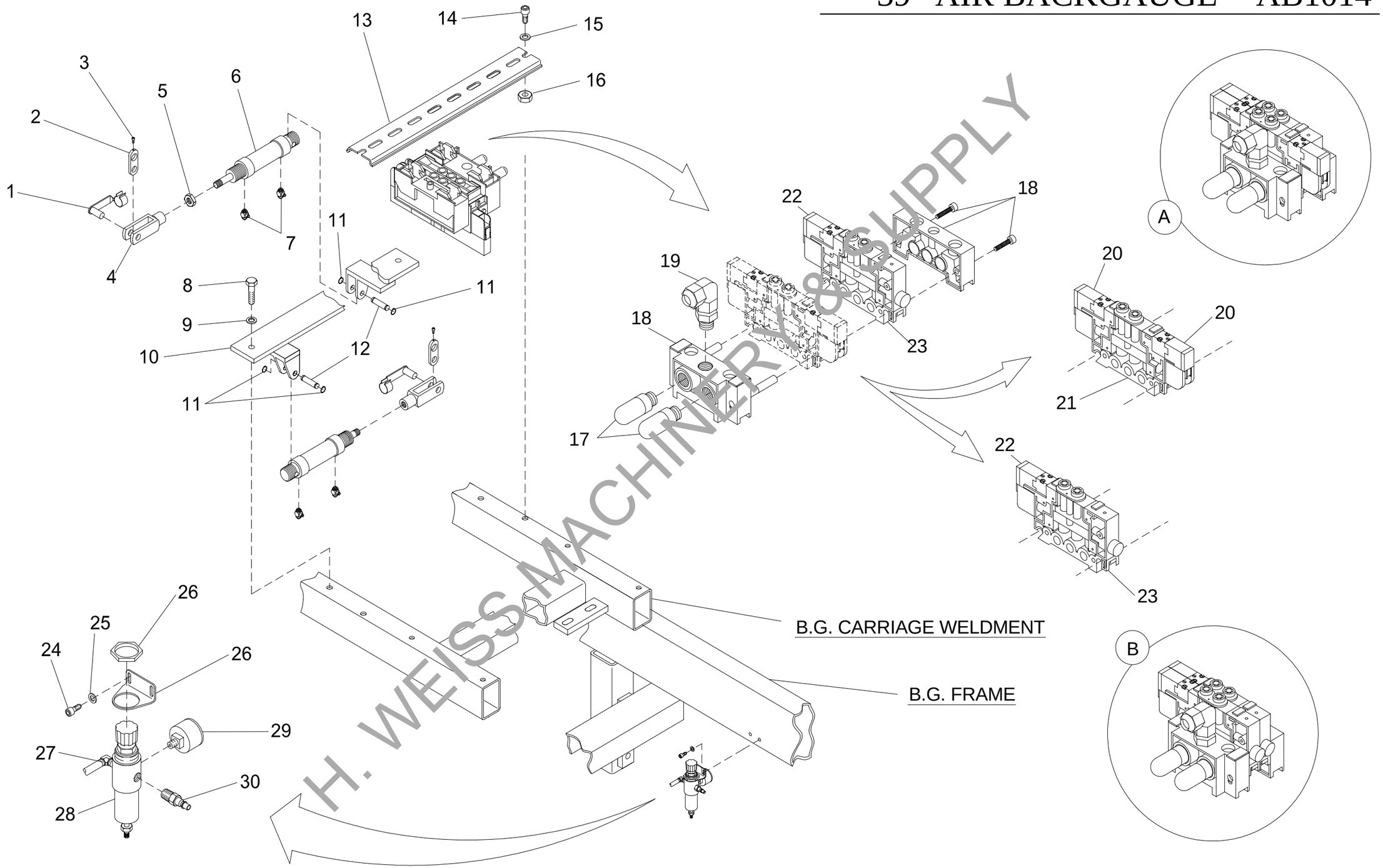

H. WEISS MACHINERY & SUPPLY

FIG. 4

AIR COMPONENTS ASSEMBLY

ITEM	QTY	RW PART #	RW PART DESCRIPTION	ITEM	QTY	RW PART #	RW PART DESCRIPTION
1	2	669203816	CLEVIS CLAMP/HOLDER	**16**	2	686023074	5mm HEX NUT
2	2	689210458	CAM	**17**	2	669203817	MUFFLER
3	2	686012752	6 X 6mm SOC SET SCREW	**18**	1	669203811	MANIFOLD BLOCK HEAD/TAIL SET
4	2	669203815	CLEVIS	**19**	1	669224130	90° ELBOW FITTING 1/8"-8
5	1	N/A	HEX NUT	**20**	2	669284001	SOLENOID, NON-LOCKING 24VDC
6	2	669214008	CYLINDER	**21**	1	669274816	4 WAY 2 POSITION SINGLE VALVE
7	4	669224129	90° ELBOW WITH FLOW CONTROL	**22**	1	669284000	SOLENOID, LOCKING 24VDC
8	2	686012770	8 X 20mm HEX HD SCREW	**23**	1	669274815	4 WAY 2 POSITION
9	2	686033175	8mm FLAT WASHER	**24**	2	686012701	5 X 8mm BUTTON HD PHILLIPS
10	1	689200459	CYLINDER MOUNTING BRACKET	**25**	2	686033178	5mm FLAT WASHER
11	4	686164337	RETAINING RING	**26**	1	669203812	AIR REGULATOR MOUNTING BRACKET WITH HEX NUT
12	2	669203814	CYLINDER MOUNTING PIN	**27**	1	669224132	90° ELBOW FITTING 1/4" - 8
13	1	N/A	DIN RAIL	**28**	1	669234409	AIR REGULATOR
14	2	686012805	5 X 16mm SOC HD CAP SCREW	**29**	1	669254605	PRESSURE GAUGE 0-10 BAR
15	2	686033178	5mm FLAT WASHER	**30**	1	669224117	AIR LINE CONNECTOR

NOT PICTURED

ITEM	QTY	RW PART #	RW PART DESCRIPTION
N/A	1	669244509	8mm COILED TUBING
N/A	50"	669244508	4mm TUBING

H. WEISS MACHINERY & SUPPLY

61” AIR BACKGAUGE - AB1014

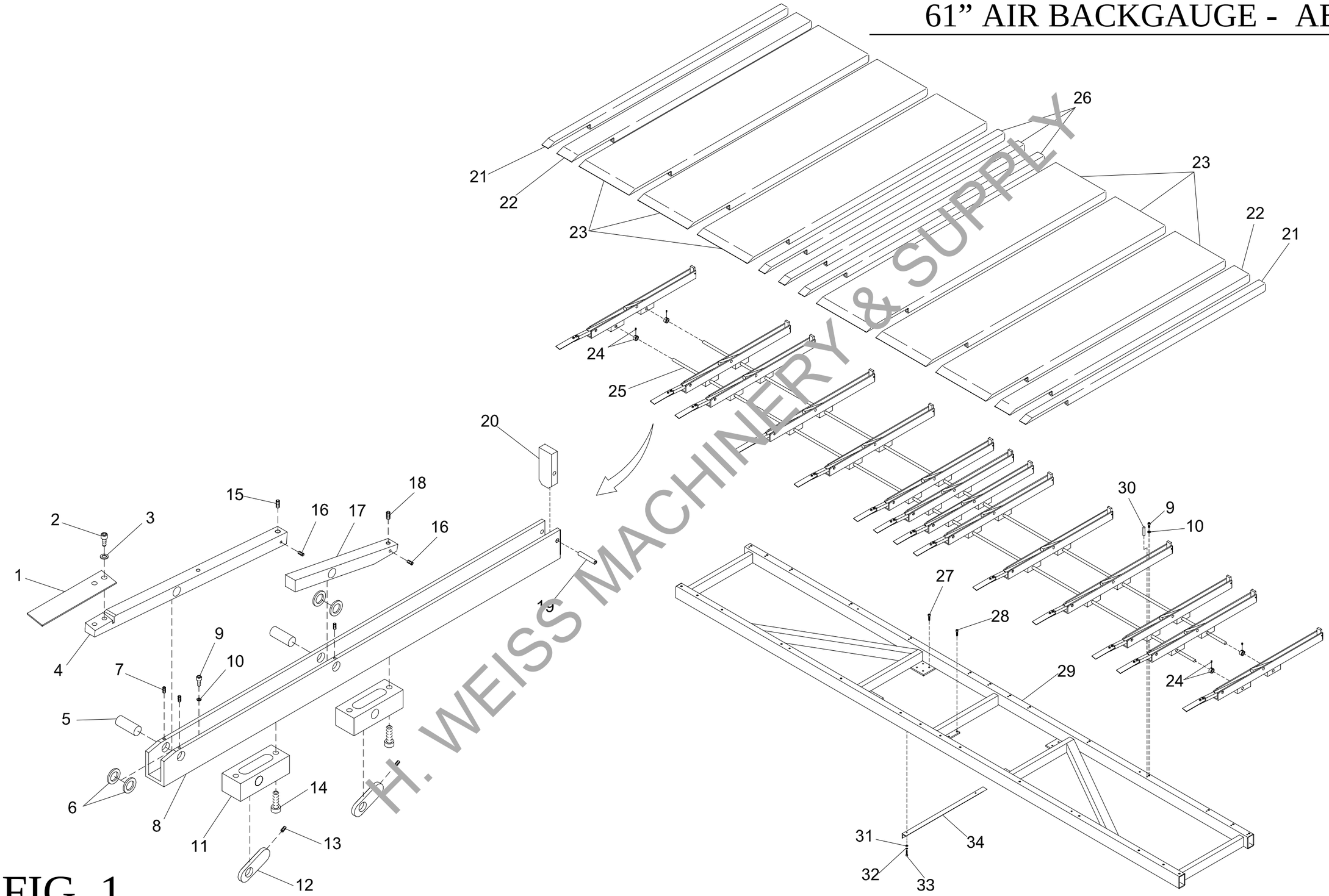

FIG. 1

H. WEISS MACHINERY & SUPPLY

TOP CARRIAGE ASSEMBLY

ITEM	QTY	RW PART #	RW PART DESCRIPTION	ITEM	QTY	RW PART #	RW PART DESCRIPTION
1	14	689120126	FINGER, BACKGAUGE SPRING STEEL	**18**	14	686012761	6 X 12mm SET SCREW
2	28	686012675	6 X 10mm SHC LOW HD SCREW	**19**	14	686063507	5 X 30mm ROLL PIN
3	28	686033173	6mm FLAT WASHER	**20**	14	689130460	REAR FIXED FINGER
4	14	689360297	FRONT FINGER HOLDER	**21**	2	689220470	COVER PLATE, NARROW BG END -- 65mm
5	28	689160429	FINGER PIN	**22**	2	689220468	COVER PLATE, MEDIUM BG -- 120mm
6	56	689830298	BLACK PLASTIC WASHER	**23**	6	689220467	COVER PLATE, WIDE BG -- 325mm
7	42	686012759	3 X 4mm SOC SET SCREW	**24**	4	686000598	COLLAR WITH SET SCREW
8	14	689010428	ALUMINUM FINGER GUIDE/HOLDER	**25**	2	689030425	12mm B.G. FINGER GUIDE ROD
9	28	686012760	8 X 12mm SHC LOW HD SCREW	**26**	3	689220469	COVER PLATE, NARROW BG -- 85mm
10	28	686033175	8mm FLAT WASHER	**27**	16	686012702	6 X 16mm SHC SCREW
11	28	689130430	NYLON FINGER MOUNT BLOCK	**28**	4	686012702	6 X 16mm SHC SCREW
12	28	689210431	CAM	**29**	1	689090471	CARRIAGE WELDMENT
13	28	686012761	6 X 12mm SET SCREW	**30**	14	686063506	5 X 15mm ROLL PIN
14	56	686012725	6 X 25mm SOC HD CAP SCREW	**31**	2	686033178	5mm FLAT WASHER
15	14	686012762	6 X 16mm SET SCREW	**32**	2	686033180	5mm LOCK WASHER
16	28	686012759	3 X 4mm SET SCREW	**33**	2	686012711	5 X 10mm SHC SCREW
17	14	689360445	SOLID FINGER	**34**	1	786130419	FLAG, BG HOME SWITCH

H. WEISS MACHINERY & SUPPLY

61” AIR BACKGAUGE - AB1014

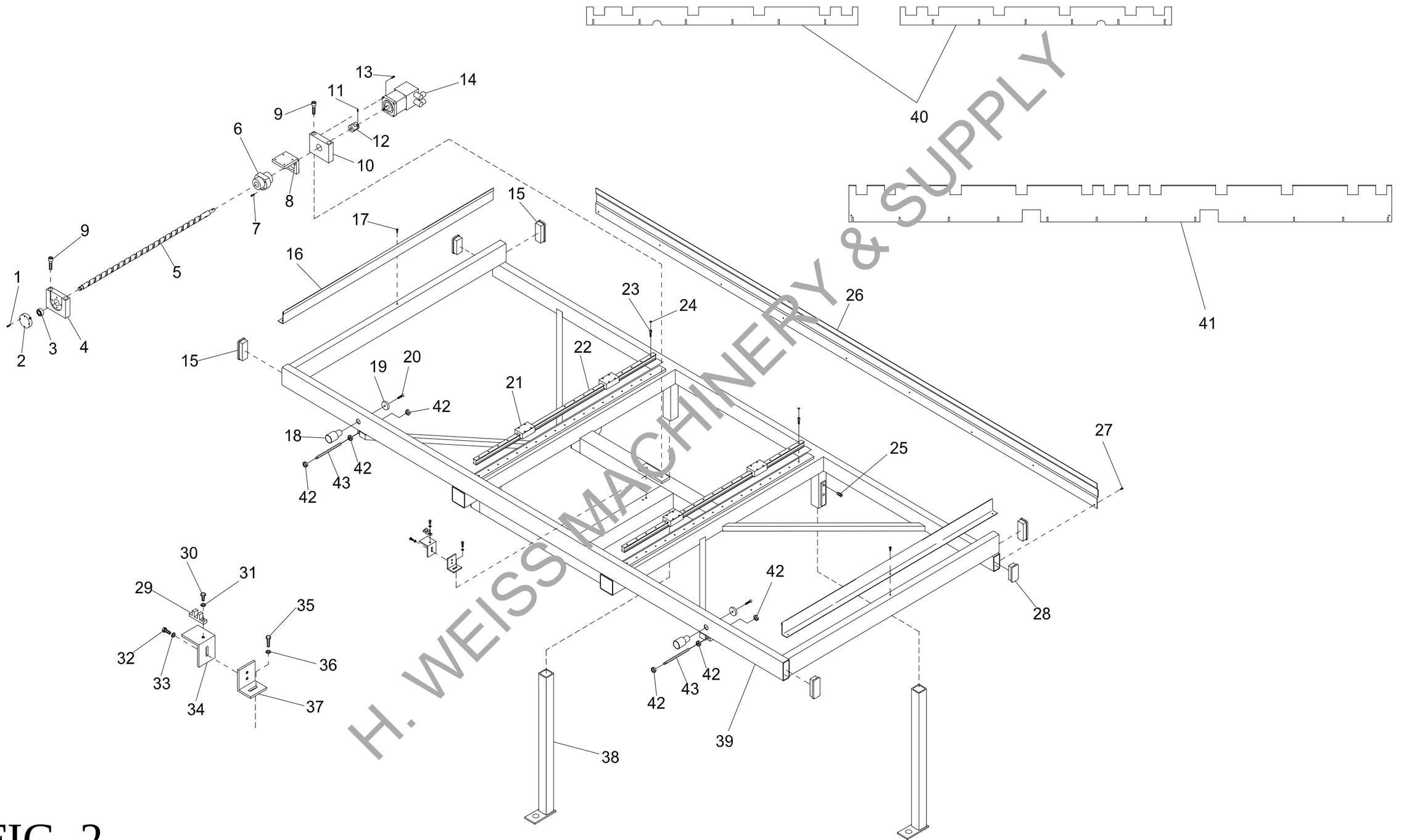

H. WEISS MACHINERY & SUPPLY

FIG. 2

FIXED TABLE WITH BALL SCREW DRIVE ASSEMBLY

ITEM	QTY	RW PART #	RW PART DESCRIPTION	ITEM	QTY	RW PART #	RW PART DESCRIPTION
1	4	686012719	5 X 20mm SHC SCREW	**23**	40	686012725	6 X 25mm SHC SCREW
2	1	786260426	BEARING RETAINER	**24**	40	686000596	PLUG
3	1	686194734	BEARING	**25**	4	686012727	12 X 20mm SOC SET SCREW
4	1	786200425	FRONT BALL SCREW MOUNT	**26**	1	689440457	REAR B.G. GUARD
5	1	N/A	BALL SCREW	**27**	9	686012708	6 X 10mm HEX HD SCREW
6	1	N/A	BALL SCREW NUT	**28**	2	686000597	SMALL TUBE END CAP
7	5	686012721	6 X 30mm SHC SCREW	**29**	1	660152673	BACKGAUGE HOMING SENSOR
8	1	786200423	BACKGAUGE DRIVE BRACKET	**30**	1	686012724	4 X 12mm SLOTTED HD SCREW
9	4	686012720	12 X 90mm SHC SCREW	**31**	4	686033177	4mm FLAT WASHER
10	1	786200422	SERVO MOTOR MOUNT	**32**	2	686012723	6 X 16mm HEX HD SCREW
11	2	686012769	3 X 12mm SHC SCREW	**33**	2	686033173	6mm FLAT WASHER
12	1	689260452	COUPLER	**34**	1	786200430	UPPER HOMING SWITCH BRACKET
13	4	686012719	5 X 20mm SHC SCREW	**35**	2	686012722	5 X 12mm SLOTTED HD SCREW
14	1	660011197	SERVO MOTOR	**36**	2	686033178	5mm FLAT WASHER
15	4	686000545	LARGE TUBE END CAP	**37**	1	786200431	LOWER HOMING SWITCH BRACKET
16	2	786220429	CARRIAGE SHIELD	**38**	2	786140428	ADJUSTABLE SUPPORT LEG
17	6	686012701	5 X 8mm BUTTON HEAD PHILLIPS SCREW	**39**	1	689140472	BACKGAUGE FRAME WELDMENT
18	2	689160453	B.G. ALIGNMENT PIN	**40**	2	689180455	FRONT BACKGAUGE COVER SUPPORT
19	2	689830454	B.G. ALIGNMENT PIN WASHER	**41**	1	689180456	REAR BACKGAUGE COVER SUPPORT
20	2	686012767	8 X 16mm FLAT HEAD SOCKET SCREW	**42**	6	686023072	12mm JAM NUT
21	4	689080286	LINEAR WAY SLIDE	**43**	2	686012768	12 X 80mm FULL DOG POINT SET SCREW
22	2	689450285	LINEAR WAY				

H. WEISS MACHINERY & SUPPLY

BALLSCREW ASSEMBLIES

ITEM	RW PART #	RW PART DESCRIPTION
1-8	689650451	COMPLETE BALLSCREW ASSEMBLY
5-6	689390355	BALL SCREW AND NUT ONLY ASSEMBLY

61” AIR BACKGAUGE - AB1014

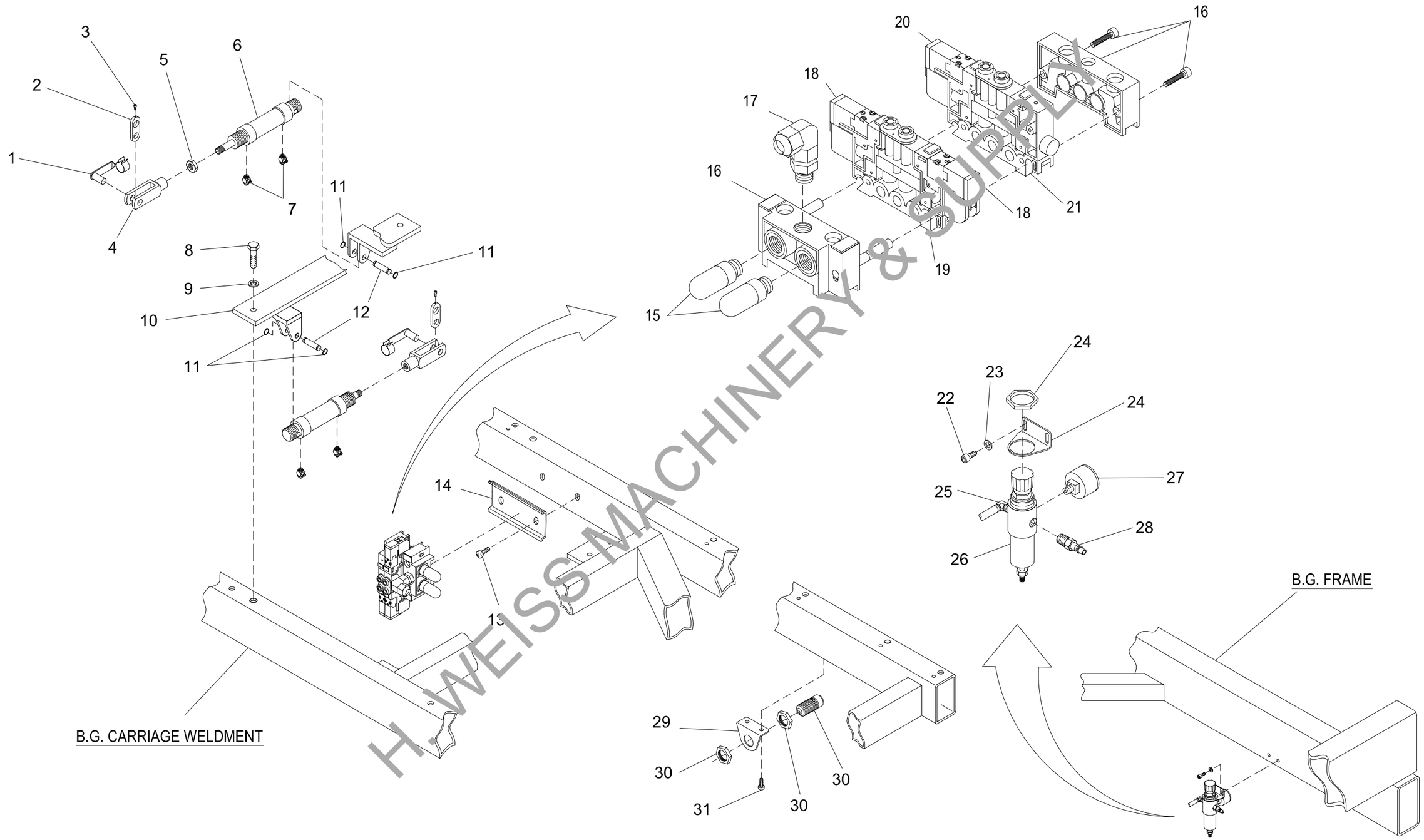

H. WEISS MACHINERY & SUPPLY

FIG. 3

AIR COMPONENT ASSEMBLY

ITEM	QTY	RW PART #	RW PART DESCRIPTION	ITEM	QTY	RW PART #	RW PART DESCRIPTION
1	2	669203816	CLEVIS CLAMP/HOLDER	**17**	1	669224130	90° ELBOW FITTING 1/8"-8
2	2	689210458	CAM	**18**	2	669284001	SOLENOID, NON-LOCKING 24VDC
3	2	686012752	6 X 6mm SOC SET SCREW	**19**	1	669274816	4 WAY 2 POSITION SINGLE VALVE
4	2	669203815	CLEVIS	**20**	1	669284000	SOLENOID, LOCKING 24VDC
5	1	N/A	HEX NUT	**21**	1	669234815	4 WAY 2 POSITION
6	2	669214008	CYLINDER	**22**	2	686012701	5 X 8mm BUTTON HD PHILLIPS
7	4	669224129	90° ELBOW ELBOW WITH FLOW CONTROL	**23**	2	686033178	5mm FLAT WASHER
8	2	686012770	8 X 20mm HEX HD SCREW	**24**	1	669203812	AIR REGULATOR MOUNTING BRACKET WITH HEX NUT
9	2	686033175	8mm FLAT WASHER	**25**	1	669224132	90° ELBOW
10	1	689200459	CYLINDER MOUNTING BRACKET	**26**	1	669234409	AIR REGULATOR
11	4	686164337	RETAINING RING	**27**	1	669254605	PRESSURE GAUGE 0-10 BAR
12	2	669203814	CYLINDER MOUNTING PIN	**28**	1	669224117	AIR LINE CONNECTOR
13	2	686012701	5 X 8mm BUTTON HEAD PHILLIPS SCREW	**29**	1	669203813	STR COUPLER MOUNTING BRACKET
14	1	N/A	DIN RAIL	**30**	2	669224131	BULKHEAD COUPLING WITH (2) HEX NUTS
15	2	669203817	MUFFLER	**31**	2	686012701	BUTTON HEAD PHILLIPS SCREW
16	1	669203811	MANIFOLD BLOCK HEAD/TAIL SET				

NOT PICTURED

ITEM	QTY	RW PART #	RW PART DESCRIPTION
N/A	1	669244509	COILED TUBING, 8mm
N/A	50"	669244508	4mm TUBING
N/A	44"	669244510	8mm TUBING

H. WEISS MACHINERY & SUPPLY

61” BACKGAUGE W/O AIR- AB1014

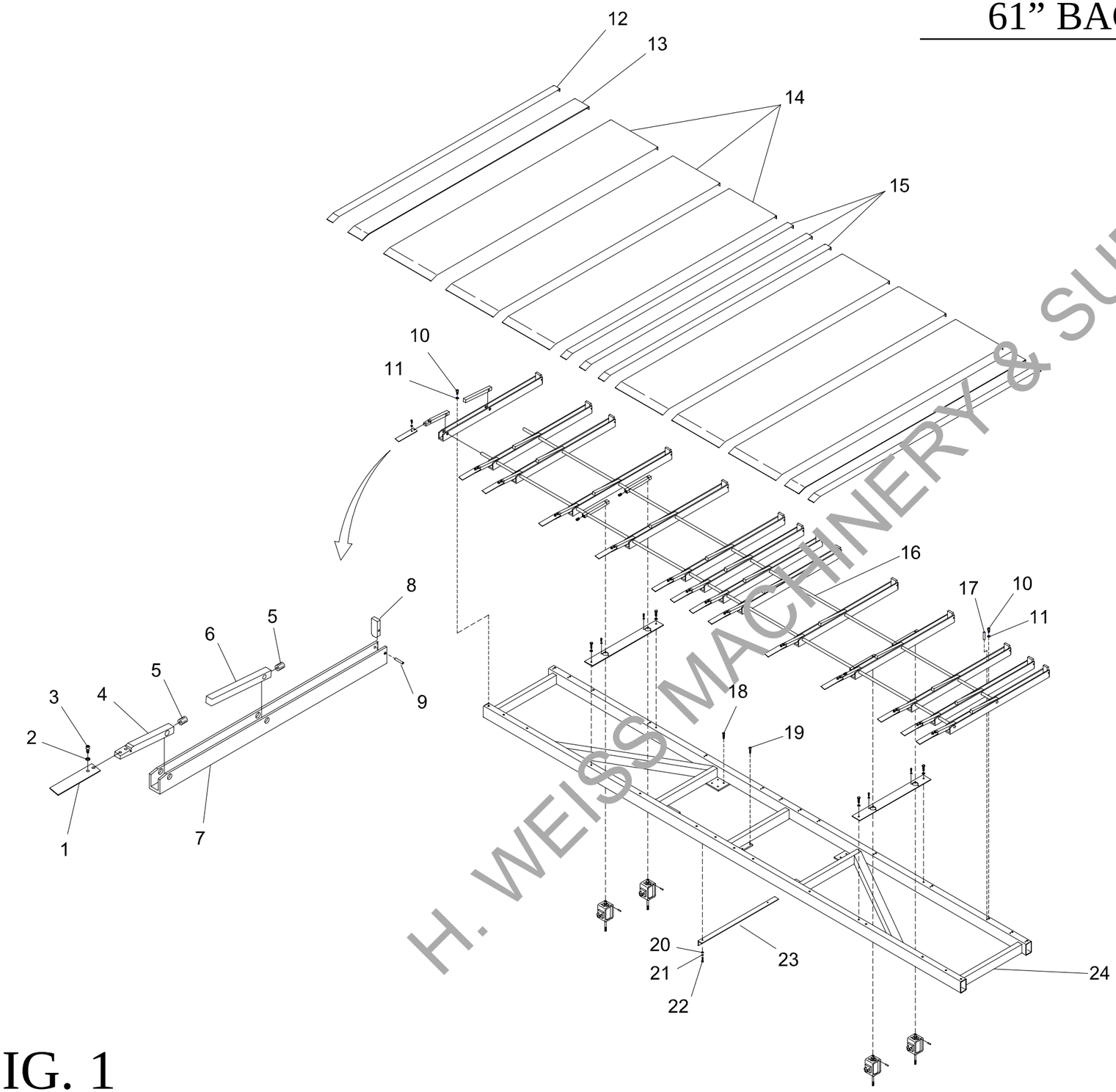

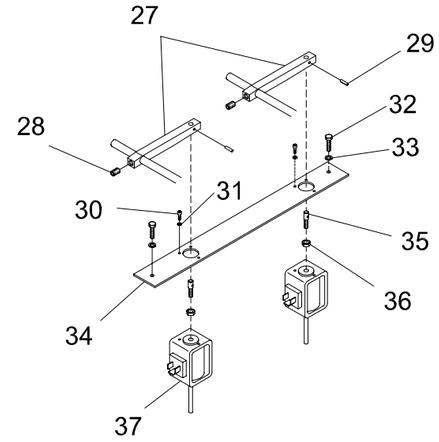

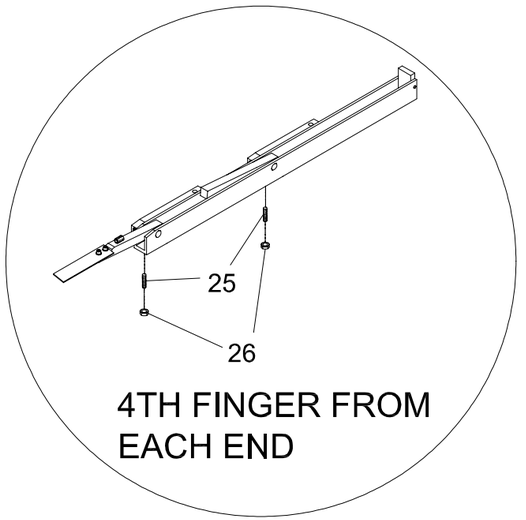

H. WEISS MACHINERY & SUPPLY

FIG. 1

TOP CARRIAGE ASSEMBLY

ITEM	QTY	RW PART #	RW PART DESCRIPTION	ITEM	QTY	RW PART #	RW PART DESCRIPTION
1	14	689120126	FINGER, BACKGAUGE SPRING STEEL	**20**	2	686033178	5mm FLAT WASHER
2	28	686033173	6mm FLAT WASHER	**21**	2	686033180	5mm LOCK WASHER
3	28	686012675	6 X 10mm SHC LOW HD SCREW	**22**	2	686012711	5 X 10mm SHC SCREW
4	14	786010412	FRONT FINGER HOLDER	**23**	1	786130413	FLAG, BG HOME SWITCH
5	28	686012708	10 X 16mm SOC SET SCREW	**24**	1	686033471	CARRIAGE WELDMENT
6	14	689360375	SOLID FINGER	**25**	4	686012817	8 X 35mm DOG POINT SET SCREW
7	14	689010428	ALUMINUM FINGER GUIDE/HOLDER	**26**	4	695023079	8mm JAM NUT
8	14	689130460	REAR FIXED FINGER	**27**	4	786030414	FINGER LIFT ARM
9	14	686063507	5 X 30mm ROLL PIN	**28**	4	686012708	10 X 15mm SOC HD SET SCREW
10	28	686012760	8 X 12mm SHC LOW HD SCREW	**29**	4	686063509	4 X 20mm ROLL PIN
11	28	686033175	8mm FLAT WASHER	**30**	12	686012710	4 X 10mm SHC SCREW
12	2	689220275	B.G. COVER, 2 5/8" WIDE	**31**	12	686033177	4mm FLAT WASHER
13	2	689220273	B.G. COVER, 4 3/4" WIDE	**32**	4	686012709	8 X 12mm HEX HEAD SCREW
14	6	689220272	B.G. COVER, 12 3/4" WIDE	**33**	4	686033175	8mm FLAT WASHER
15	3	689220274	B.G. COVER, 3 3/8" WIDE	**34**	2	786060420	SOLENOID MOUNTING PLATE
16	2	689030425	12mm B.G. FINGER GUIDE ROD	**35**	4	786000538	MOUNTING STUD
17	14	686063506	5 X 15mm ROLL PIN	**36**	4	695023079	8mm HEX NUT
18	16	686012702	6 X 16mm SHC SCREW	**37**	4	660112230	SOLENOID, FINGER LIFT
19	4	686012702	6 X 16mm SHC SCREW	**-- 37a**	4	660172796	SOLENOID ELECTRICAL PLUG

H. WEISS MACHINERY & SUPPLY

61” BACKGAUGE W/O AIR- AB1014

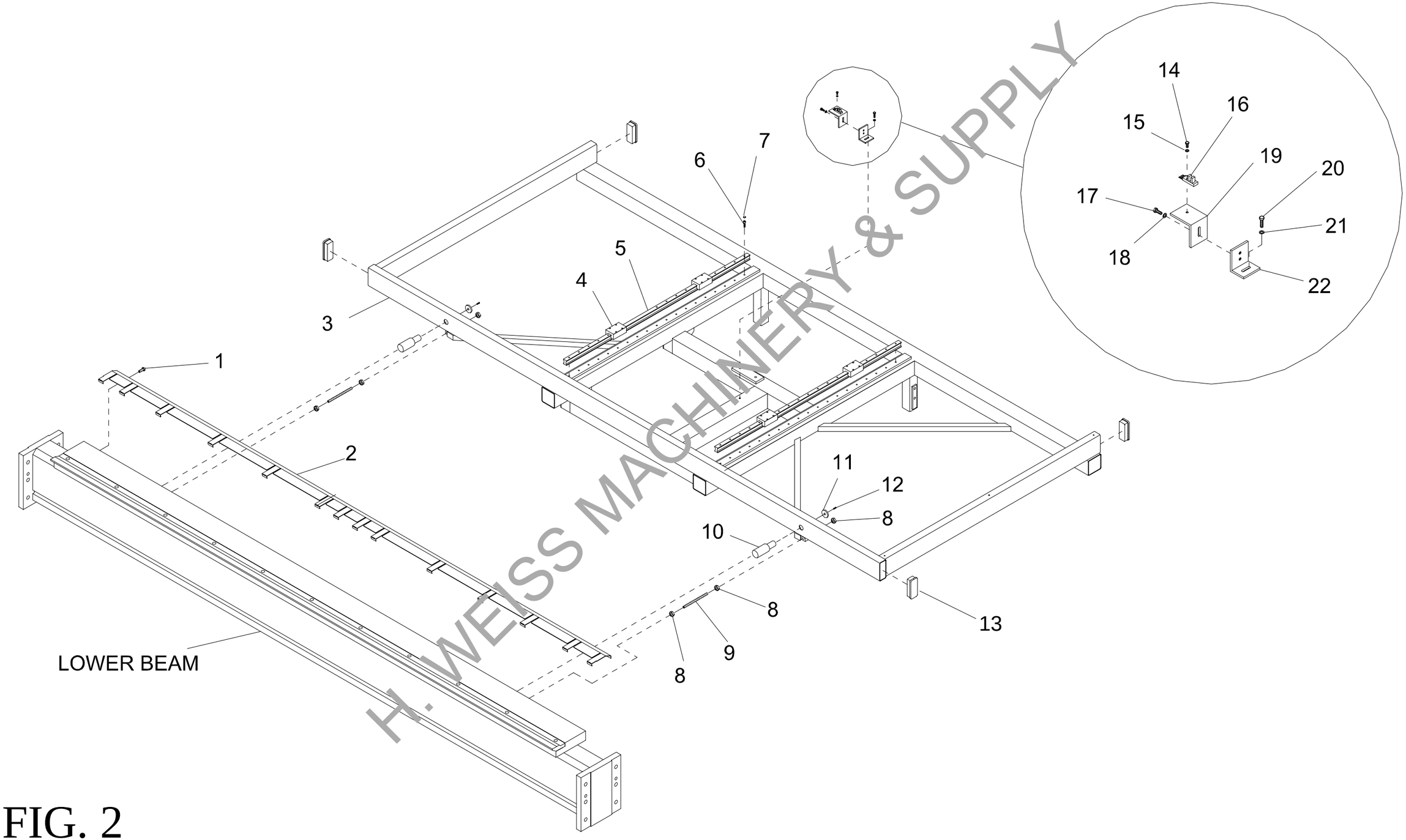

H. WEISS MACHINERY & SUPPLY

FIG. 2

FIXED BACK GAUGE TABLE ASSEMBLY

ITEM	QTY	RW PART #	RW PART DESCRIPTION	ITEM	QTY	RW PART #	RW PART DESCRIPTION
1	7	686012701	5 X 8mm PHILLIPS BUTTON HEAD SCREW	**12**	2	68601276[illegible]	8 X 16mm FLAT HEAD SOCKET SCREW
2	1	689450366	FINGER RAMP	**13**	4	6860[illegible]05[illegible]	LARGE TUBE END CAP
3	1	689140472	BACKGAUGE FRAME WELDMENT	**14**	1	686012724	4 X 12mm SLOTTED HD SCREW
4	4	689080286	LINEAR WAY SLIDE	**15**	1	686033177	4mm FLAT WASHER
5	2	689450285	LINEAR WAY	**16**	1	660152673	BACKGAUGE HOMING SENSOR
6	40	686012725	6 X 25mm SHC SCREW	**17**	2	686012723	6 X 16mm HEX HD SCREW
7	40	686000596	PLUG	**18**	2	686033173	6mm FLAT WASHER
8	6	686023072	12mm JAM NUT	**19**	1	786200430	UPPER HOMING SWITCH BRACKET
9	2	686012768	12 X 80mm FULL DOG POINT SET SCREW	**20**	2	686012722	5 X 12mm SLOTTED HD SCREW
10	2	689160453	B.G. ALIGNMENT PIN	**21**	2	686033178	5mm FLAT WASHER
11	2	689830454	B.G. ALIGNMENT PIN WASHER	**22**	1	786200431	LOWER HOMING SWITCH BRACKET

H. WEISS MACHINERY & SUPPLY

61” BACKGAUGE W/O AIR- AB1014

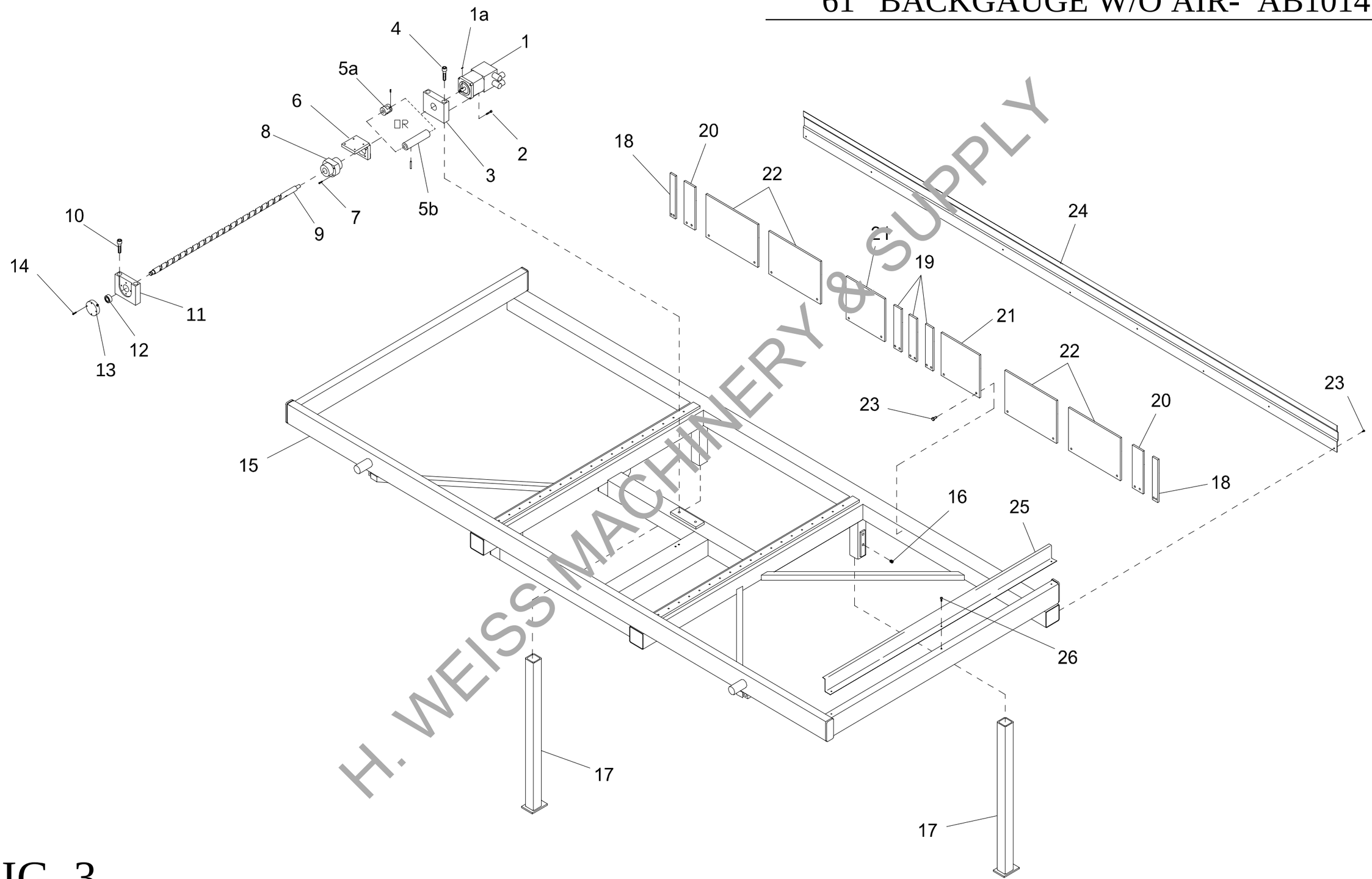

H. WEISS MACHINERY & SUPPLY

FIG. 3

FIXED TABLE WITH BALL SCREW DRIVE ASSEMBLY

ITEM	QTY	RW PART #	RW PART DESCRIPTION	ITEM	QTY	RW PART #	RW PART DESCRIPTION
1	1	660011197	SERVO MOTOR	**14**	4	686012719	5 X 20mm SHC SCREW
2	4	686012719	5 X 20mm SHC SCREW	**15**	1	689140472	FRAME WELDMENT
3	1	786200422	BACKGAUGE DRIVE BRACKET	**16**	4	686012727	12 X 20mm SOC SET SCREW
4	2	686012720	12 X 90mm SHC SCREW	**17**	2	786140428	ADJUSTABLE SUPPORT LEG
5a	1	689260452	COUPLER - NEW STYLE	**18**	2	689200473	30mm B.G. COVER SUPPORT
5b	1	----	COUPLER - OLD STYLE	**19**	3	689200474	50mm B.G. COVER SUPPORT
6	1	786200423	BRACKET, BALL SCREW MTG	**20**	2	689200475	85mm B.G. COVER SUPPORT
7	4	686012721	6 X 30mm SHC SCREW	**21**	2	689200476	215mm B.G. COVER SUPPORT
8	1	686000546	BALL SCREW NUT	**22**	4	689200477	290mm B.G. COVER SUPPORT
9	1	689650449	BALL SCREW	**23**	35	686012703	6 X 10mm HEX HEAD SCREW
10	2	686012720	12 X 90mm SHC SCREW	**24**	1	689440279	REAR B.G. GUARD
11	1	786200425	FRONT BALL SCREW MOUNT	**25**	2	786220429	CARRIAGE SHIELD
12	1	686194734	BEARING	**26**	6	686012701	5 X 8mm BUTTON HEAD PHILLIPS SCREW
13	1	786260426	BEARING RETAINER				

H. WEISS MACHINERY & SUPPLY

COMPLETE BALLSCREW ASSEMBLIES

ITEM	RW PART #	RW PART DESCRIPTION
8-9	689390355	BALL SCREW AND NUT ONLY ASSEMBLY
6-14	689650451	COMPLETE BALLSCREW ASSEMBLY