LOCKFORMER

20 or 22

Auto Guide Flanger

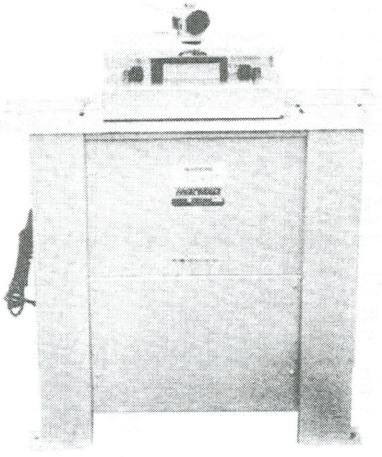

H. WEISS MACHINERY & SUPPLY

20 or 22 Gauge Lockformer Auto-Guide Flanging Attachment Parts List

PLEASE GIVE PART NUMBER WHEN ORDERING PARTS

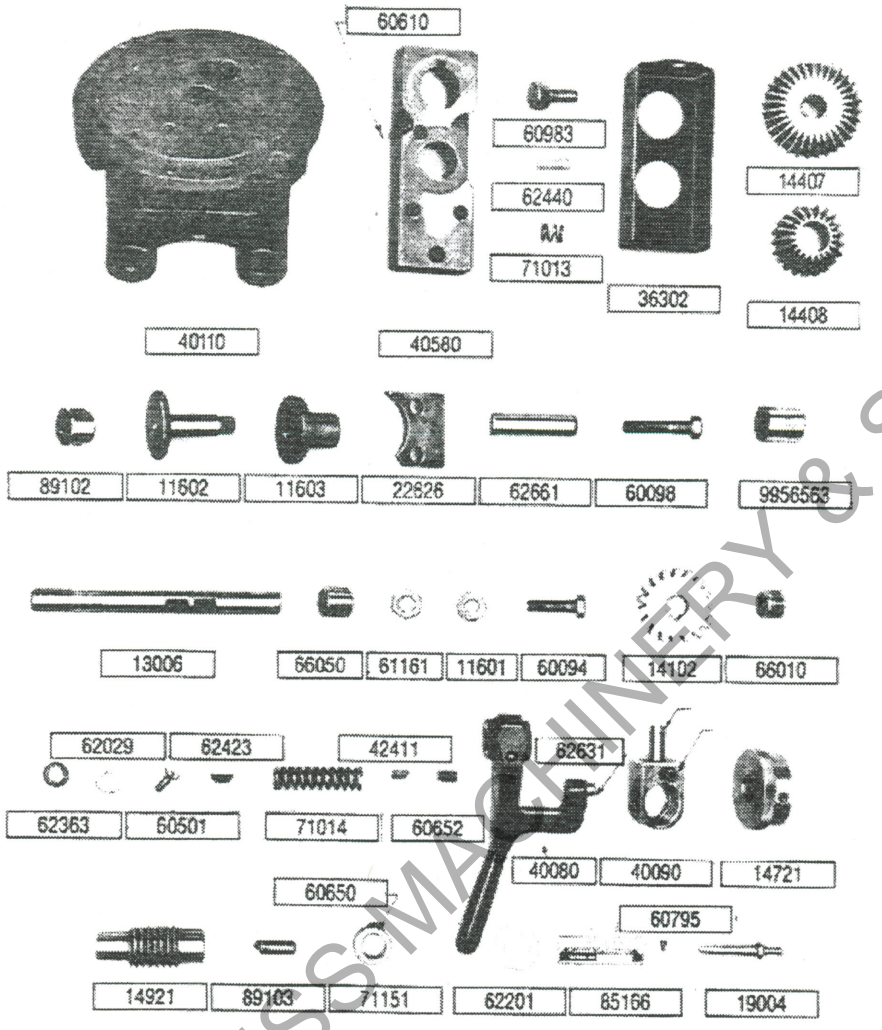

PARTS LIST AND DESCRIPTION		
Part Number	Description	Pieces Per Unit
40110	Base Coating	1
40580	Steel Forming Head	1
60983	Thumb Head Screw	1
62440	Special Machine Key	1
71013	Compressions Spring	1
36302	Cover	1
14407	Bevel Gear	1
14408	Gear (Comb. Spur & Bevel)	1
89102	Lifter Plug	1
11602	Knurled Forming Roll	1
11603	Plain Forming Roll	1
22626	Spacer Plate	1
62661	5/8 x 2-1/4 Dowel Pin	1
60098	3/8-16 x 2 HHCS	2
9956563	Inner Race Assembly (66010 & 66164)	1
13006	Roll Shaft	1
66050	Bearing B1020	2
61161	1/2-20 Hex Lock Nut	1
11601	Adjustable Guide Roll	1
60094	3/8-16 x 1-1/4 HHCS	4
14102	Steel Gear	2
62363	Lock Washer 3/8	4
62029	Washer 3/8 x 1/16	2
60501	1/4-20 x 1/2 FHMS	4
62423	3/16 x 1-1/2 Key	1
60655	5/16-18 x 3/4 SSS	1
62631	3/8 x 3/4 Dowel Pin	1
60610	1/4-20 x 1/4 SSS	3
66010	Bearing B108 Torr.	4
42411	Modified Woodruff Key 61	1
40080	Compensator Arm	1
40090	Tension Screw Nut	1
14721	Gauge Dial	1
14921	Tension Screw	1
19004	Tension Spring Push Rod	1
62641	Dowel Pin 7/16 x 1-1/2	1
71014	Spring	1
89103	Sensory Casting	1
60303	1/4-20 x 3/4 SHCS	1
71151	Collar 5/8	1
85166	Name Plate	1
50258	Stand (Forming Table)	1
62201	5/8 x 1/16 Washer	2
36001	Cover Clamp	2
39501	Cover Guard	1
60309	1/4-20 x 1/2 SH Screw	1
60650	1/4-20 x 3/8 Set Screws	2
66164	Bearing B107	1

H. WEISS MACHINERY & SUPPLY

Flanging Attachment for Lockformer Models 20 & 22

To Install Auto-Guide Power Flanging Attachment

1. Remove top cover from Lockformer.
2. Loosen front cap screws on spacers No. 1 and 4.
3. Remove spacers No. 2 and 3 by taking out front and back caps screws.
4. Set flanging attachment over the forming head so that the combination bevel and spur gear meshes with the gear on Pittsburgh Lock roll No. 3.
5. Fasten flanging attachment with the cap screws which held spacers No. 2 and 3 in place.
   CAUTION: Be sure to tighten all cap screws!

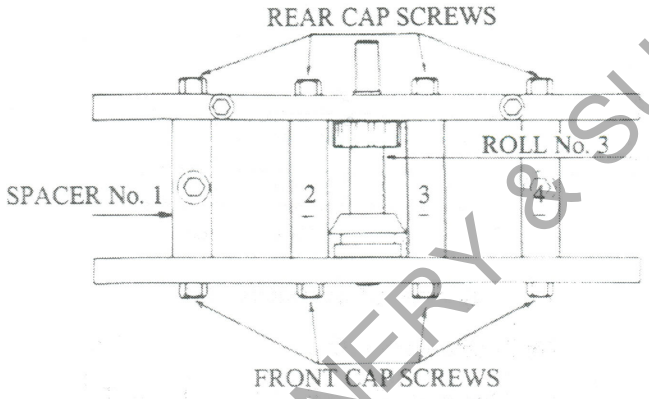

To Operate Auto-Guide Power Flanging Attachment

Adjust Unit For Gauge Material To Be Used

To adjust clearance between flanging rolls, tighten the adjusting screw on the front of the block of the machine all the way, then loosen the screw approximately one eighth of a turn. (This setting is usually correct for 26 gauge material). Do not set front gauge adjusting screw too tight. It should be set just tight enough to draw the metal through the rolls. Too tight a setting will stretch and wrinkle the material.

To adjust the spring tension on the compensator arm, tighten the adjusting dial on the back side of the flanger to the stop and then turn back to the proper gauge setting shown on the adjusting dial.

Turn Up A "Starting Flange"

on the material before inserting it into the rolls. This is done by inserting the leading edge of the work to be flanged in the slot cut into the table and bending the piece away from the operator approximately 45°. Start the leading edge of the material into the rolls. As the material passes through the rolls, the compensator arm will make contact with the material and guide it through the rolls. If the material pulls out of the rolls, it is an indiction that either the front adjusting screw is too loose or the back adjusting dial is not tight enough.

Important

When starting a partially formed section that contains an inside curve, push the compensator arm back until it locks out of position. Feed partially formed section into the rolls and the machine will pull the material through. As the rolls approach the section that is not formed, bring the compensator arm to the material holding the spring tension off the piece until the unformed section comes to the rolls; then bear pressure to the piece until the flange picks up, then release compensator arm so that "automatic" guiding is resumed.

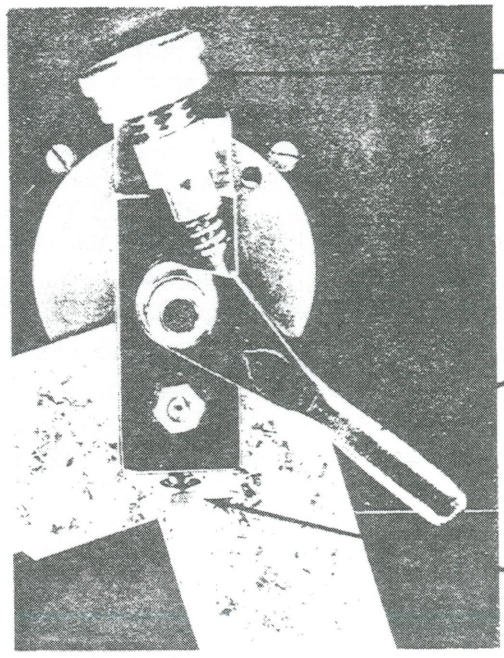

H. WEISS MACHINERY & SUPPLY

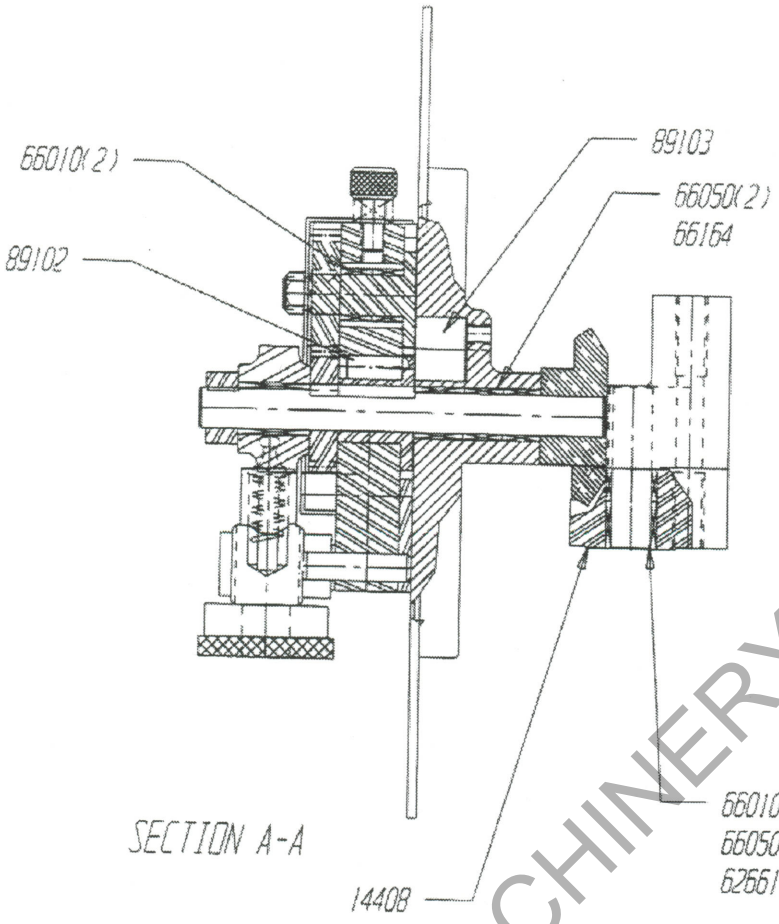

FORMING HEAD...150101

THE LOCKFORMER CO. 711 OGDEN AVE. LISLE, ILLINOIS 60532			6
MACHINE 20-22 GA FLANGER		PART NUMBER	5
PART NAME FLANGER ASSY		56366	4
MATERIAL	HEAT TREAT	SCALE 2:1	3
FRAC. TOL / DEC. TOL / ANG. TOL	DRAWN BY M R	CHECKED BY / DATE 1-22-97	2 / REVIS

H. WEISS MACHINERY & SUPPLY

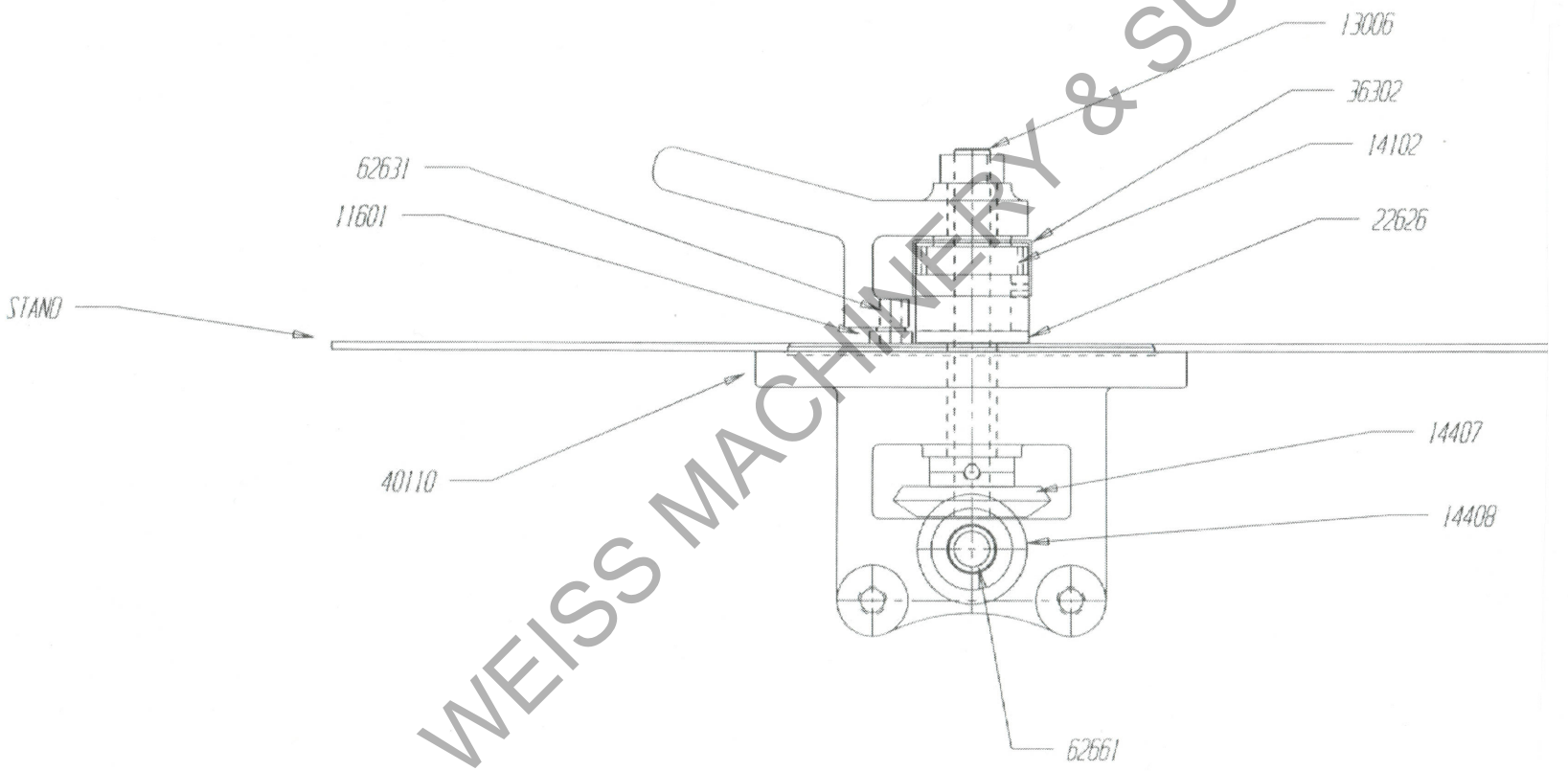

H. WEISS MACHINERY & SUPPLY

56366

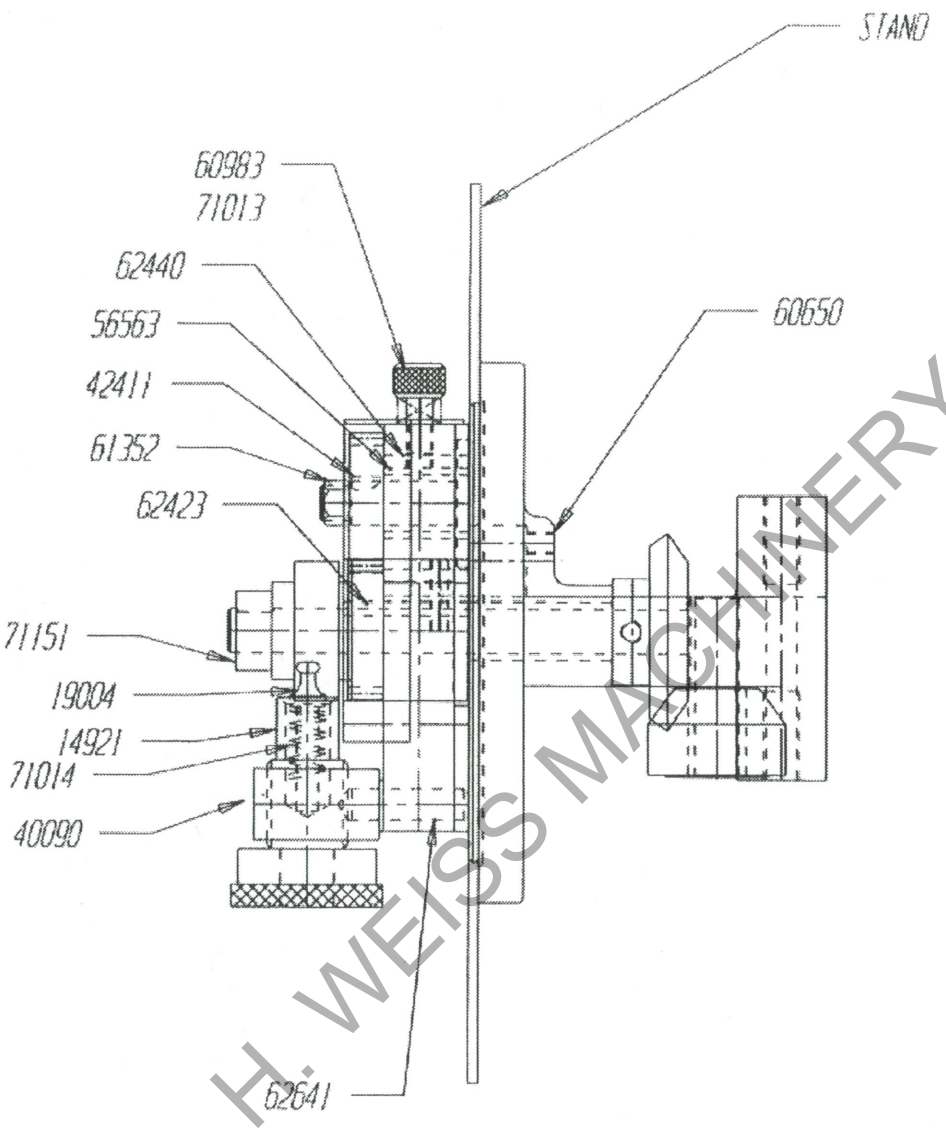

H. WEISS MACHINERY & SUPPLY

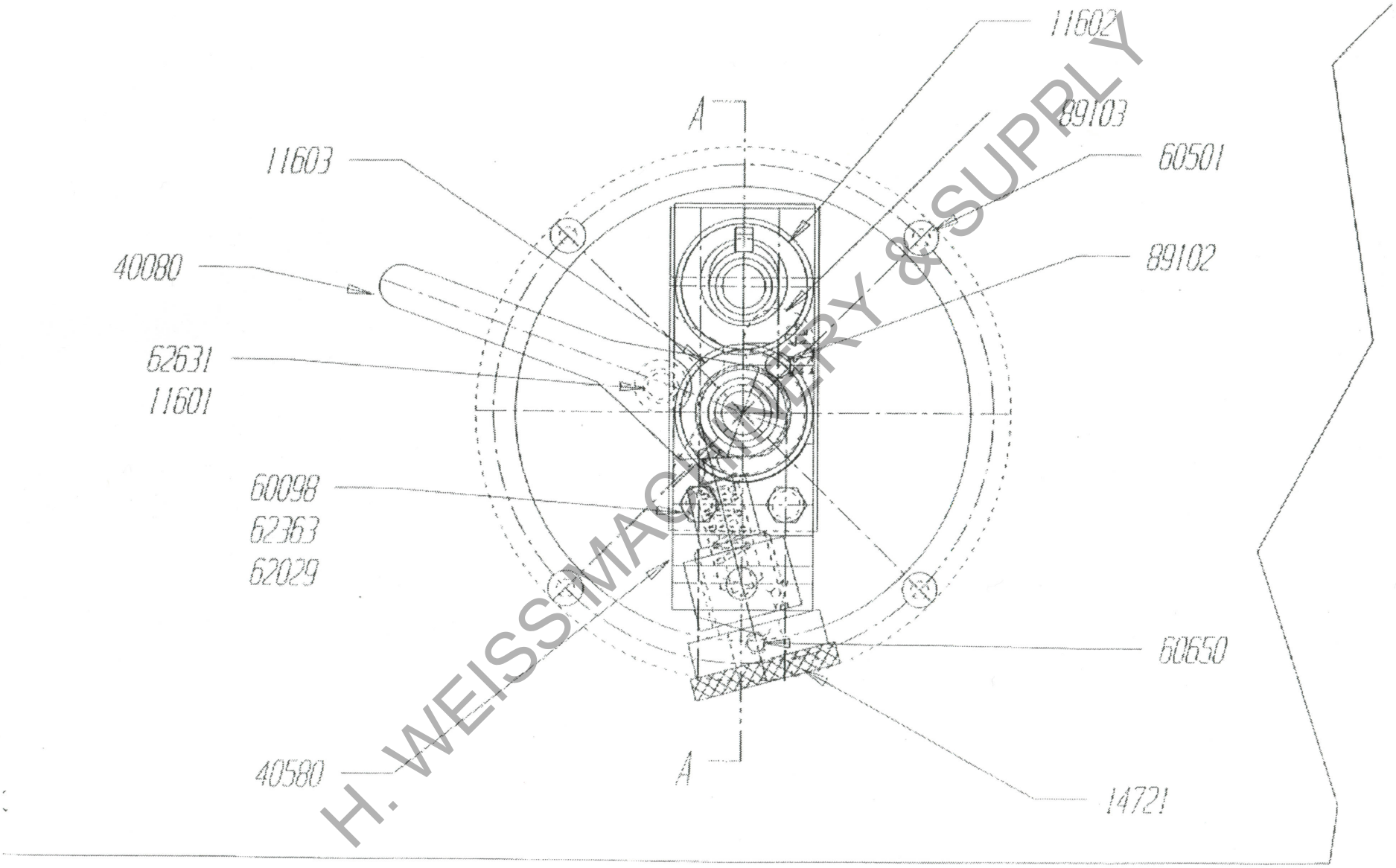

H. WEISS MACHINERY & SUPPLY