GENERAL OPERATING INSTRUCTIONS AND PARTS LIST

HEAVY DUTY 16 OR 18 GAUGE PITTSBURGH MACHINE

H. WEISS MACHINERY & SUPPLY

H. Weiss Machinery (718) 605-0395

OPERATING INSTRUCTIONS

Your FLAGLER 16 or 18 gauge heavy duty Pittsburgh machine has been tested and adjusted at the factory, but on account of the differences in materials in various localities it is sometimes necessary to re-adjust it. Proceed as follows;

(1). If material slips or sticks on leaving forming head, tighten hold down stud at finishing end slightly.

(2). If the material works away from feed gauge, tighten hold down studs at starting end until it corrects itself.

(3). If the material shows heavy pressure marks, loosen hold down studs slightly.

If a wider or narrower hammer-over edge is desired, move the angle gauge forward or back. Be sure to keep the gauge parallel with the front edge of the top plate of the machine. Material should not touch gauge on finish end of machine. (See drawing on Page 4.)

CALIBRATED DIAL

To reset the dial if main hold studs have been re-adjusted, loosen the set screw on the dial and move the dial so the heaviest gauge, marked (16 or 18) is pointed directly at the corner of the cover plate. Holding the dial in this position tighten the stud holding the dial down snugly then loosen three-quarters of a turn, re-tighten the set screw and move the dail to the desired setting.

EXAMPLE: When the dial is set for the maximum gauge (16 or 18) the pocket of the lock is wide:

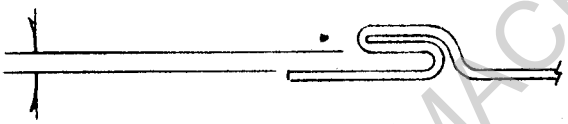

When set for lighter material the pocket becomes narrower:

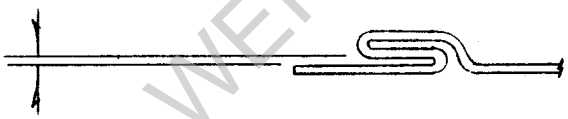

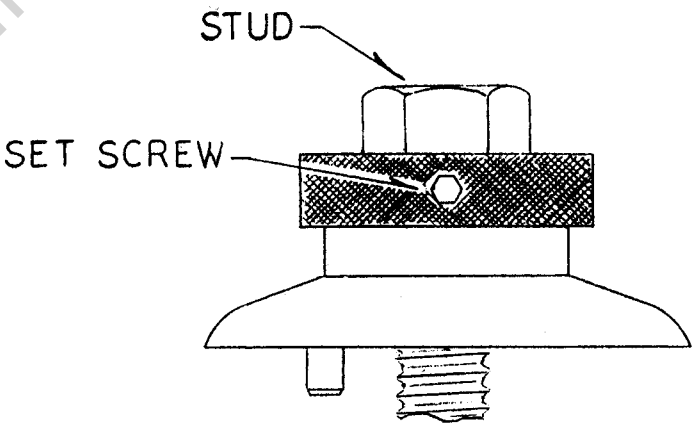

Turn calibrated dial all the way down (clockwise) and then back to gauge of metal to be run through the machine. Hold material against the angle gauge and slide it into the forming head. Be sure to hold the material to the gauge.

LUBRICATION

Zerk fittings have been mounted on the outside of the auxiliary side of the machine for lubrication of the high speed pinion and driver idler gear bearings. The slow speed shafts do not require lubrication. If the machine is to be used outdoors an oil or grease film will prevent rusting of surfaces.

H. WEISS MACHINERY & SUPPLY

INSTRUCTIONS FOR INSTALLING AUXILIARY ROLLS

To install auxiliary rolls, proceed as follows:

(1). Remove top cover

(2). Remove rear section of top plate. This will expose the extended shafts on which the rolls are to be mounted.

(3). Select the first pair of rolls, which are marked "T1" and "B1" and slip them on the shafts at the left, or feed side of the machine, placing "T1" on the upper shaft and "B1" on the lower. Repeat this procedure with rolls "T2" and "B2", etc., until all rolls have been mounted. All rolls marked "T" should be mounted on the top shafts and "B" rolls on the bottom shafts, in numerical order, reading from left to right, facing the shafts. NUMBERED SIDE MUST FACE OUTWARDS.

(4). Install keys and fasten rolls to shaft with cap-screws and washers which are provided. ("T3" of Drive Cleat Rolls needs no cap screw)

(5). Mount gauge on left or feed side of machine, using holes provided in top plate. The angle gauge on the finish end should be flush against the metal as it emerges from the rolls, and parallel to the line of rolls. The starting end gauge dimensions are as follows:

(A) For Double Seam Rolls . . . . . 1 1/4"
(B) For Standing Seam Rolls . . . . . 2"
(C) For Right Angle Flange Rolls . . . . . 1 7/16"
(D) For 5/16" Pittsburgh Lock Rolls . . . . . 1 3/4"
(E) For 5/8" Tap-in-Lock Rolls . . . . . 2 3/16"
(F) For 1/2" Tap-in-Lock Rolls . . . . . 2 1/32"
(G) For 180° Hem Rolls . . . . . 2 1/16"
(H) For Drive Cleat Rolls install guide block with its inner edge even with the outer edge of rolls.

(6). Replace top cover and back plate.

FOR SAFETY PURPOSES DISCONNECT POWER BEFORE REMOVING COVER FOR ANY REASON

RECOMMENDATION

We recommend to shops that work lighter iron, such as is used on smaller pipes and fittings, employ 5/16" Pittsburgh Lock Rolls which can be mounted on the extended shafts of this machine, If production warrants, our smaller machines (FLAGLER 24,22, or 20 with Flanging Attachments) could be considered.

The lighter iron can be worked in the permanent rolls but the closing down of the lock over the 1/2" span causes distortion of the material. We therefore suggest that you use the 5/16" Pittsburgh Lock auxiliary rolls on 22 gauge to 28 gauge iron. These rolls may be installed or changed in about 20 minutes by an inexperienced operator and the lock resulting is much more accurate and neat.

COVERS MUST BE IN PLACE WHEN IN OPERATION

Contact your distributor for price and availability of auxiliary rolls and other products in the FLAGLER line.

H. WEISS MACHINERY & SUPPLY

NOTE: DC-T3 roll of Drive Cleat Rolls is keyed but not screwed down on shaft.

Drive Cleat feed gage in position. Use angle feed gage for all other sets of rolls, mount in place of D.C. gage. Mount desired rolls, lay straightedge against faces of rolls and measure to face of gage as per set-up chart.

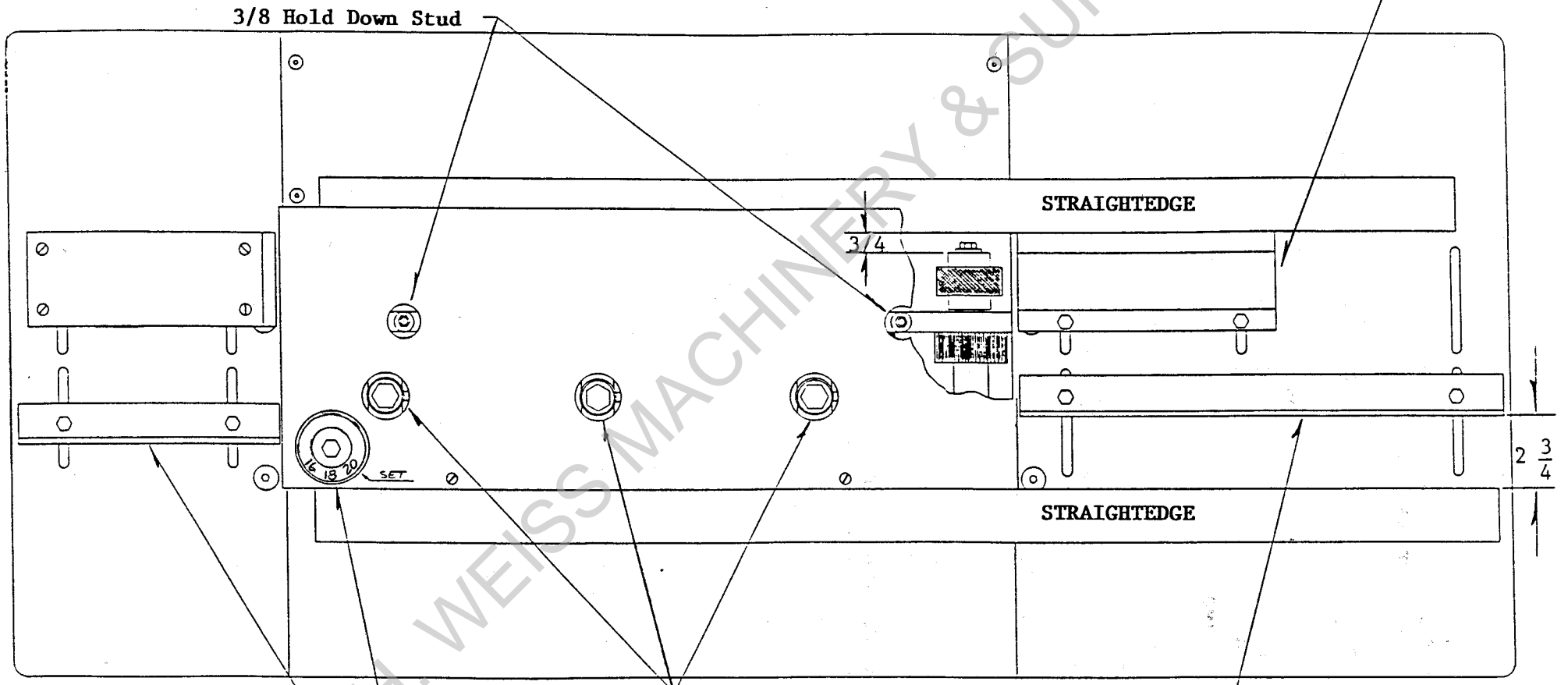

Finish End Gage - Adjust to just clear material leaving machine.

Calibrated Dial (In position for adjustment reset.)

Main Hold Down Studs
3 on 16 GA. Machine (pictured)
2 on 18 GA. Machine

Angle Feed Gage

H. WEISS MACHINERY & SUPPLY

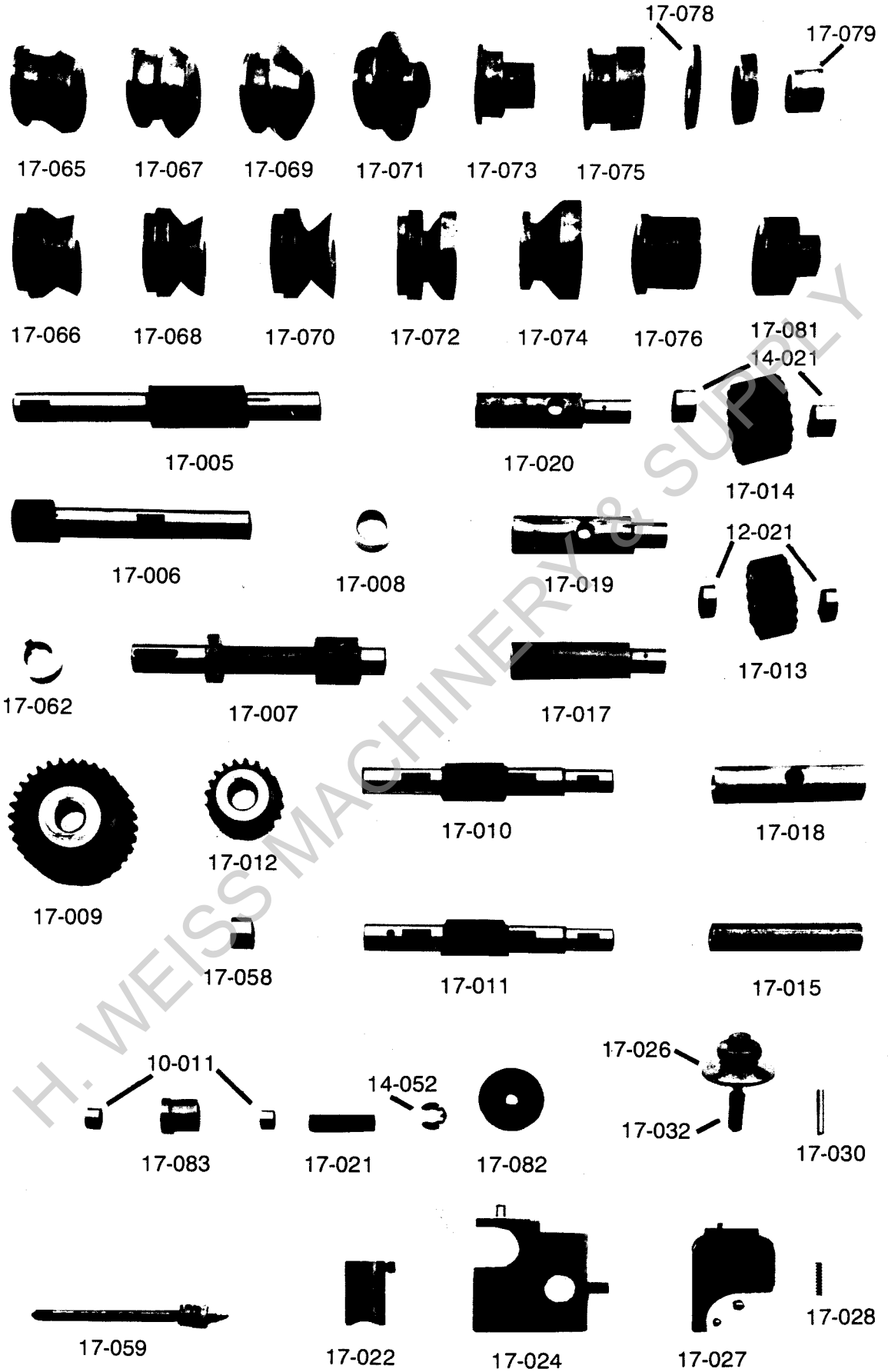

H. WEISS MACHINERY & SUPPLY

PARTS LIST FOR 16 GA. HEAVY DUTY MACHINE

Part No.	Description	Amount Rqd.
17-001 & 002..	Bottom Front & Back Plate.....	1
17-003 & 004..	Top Front & Back Plate.....	1
17-005.....	#1 Pinion Gear *	1
17-006.....	#2 Pinion Gear *	1
17-007.....	#3 Pinion Gear *	1
17-008.....	Pinion Collar *	5
17-062.....	Pinion Collar w/Keyway *	1
17-009.....	Bull Gear *	2
17-010.....	Roll Shaft *	13
17-011.....	Top 7 Roll Shaft *	1
17-012.....	Roll Shaft Gear *	14
17-013.....	Idler Gear *	5
17-014.....	Driver Idler Gear *	1
17-015.....	Plain Spacer *	7
17-017.....	Plain Step Spacer *	3
17-018.....	Plain Drilled Spacer *	3
17-019.....	Drilled & Tapped Step Spacer *	2
17-020.....	Drilled & Tapped Long Step Spacer *	1
14-052.....	Snap Ring *	1
17-021.....	Idler Roll Pin *	1
17-022.....	Saddle Washer *	9
14-054.....	Spring Washer 3/8 I.D.	24
16-013.....	Spring Washer 5/8 I.D.	24
17-058.....	Bearing 1612 *	28
17-023.....	Bearing 1612-OH.....	6
12-021.....	Bearing 148 *	10
14-021.....	Bearing 1412 *	2
10-011.....	Bearing 108 *	2
16-012.....	Oilite TT-1709-01.....	2
17-024.....	Opening Roll Holder *	1
17-025.....	Head Spacer Shims (pair).....	2
17-059.....	Stud 3/8-16 *	2
17-026.....	Calibrated Dial *	1
17-027.....	Dial Block *	1
17-028.....	Dial Spring *	1
17-029.....	Dial Pin	1
17-030.....	Positioning Pin *	1
17-031.....	Grease Bolt.....	1
17-032.....	Dial Screw *	1
17-051.....	Motor 2 HP	1
17-052.....	Pulley (Motor).....	1
17-053.....	Pulley (Driven).....	1
17-054.....	Bushing.....	1
17-055.....	"V" Belt.....	2
17-056.....	Starter.....	1
17-057.....	Heater.....	3
17-046.....	Lube Line Assy.-19".....	4
14-041.....	Lube Line Assy.-15".....	3
17-048.....	Feed Gage.....	1
17-049.....	Take-Off Gage.....	1
17-065.....	Top 1 Pittsburgh Roll *	1
17-066.....	Bottom 1 Pittsburgh Roll *	1
17-067.....	Top 2 Pittsburgh Roll *	1
17-068.....	Bottom 2 Pittsburgh Roll *	1
17-069.....	Top 3 Pittsburgh Roll *	1
17-070.....	Bottom 3 Pittsburgh Roll *	1
17-071.....	Top 4 Pittsburgh Roll *	1
17-072.....	Bottom 4 Pittsburgh Roll *	1
17-073.....	Top 5 Pittsburgh Roll *	1
17-074.....	Bottom 5 Pittsburgh Roll *	1
17-075.....	Top 6 Pittsburgh Roll *	1
17-076.....	Bottom 6 Pittsburgh Roll *	1
17-077.....	Top 7 Pittsburgh Roll Assy *.....	1
17-078.....	Top 7 Knurled Ring *	1
17-080.....	Top 7 Plain Ring *	1
17-079.....	Top 7 Collar *	1
17-081.....	Bottom 7 Pittsburgh Roll *	1
17-082.....	Opening Roll *	1
17-083.....	Bottom Idler Roll *	1

* Denotes Illustrated Part

H. WEISS MACHINERY & SUPPLY

16 OR 13 GAUGE SPRING WASHER ASSY. INSTRUCTIONS

TO WORK PROPERLY THE ASSYS. MUST BE STACKED AS SHOWN

3/8 HOLD DOWN STUDS

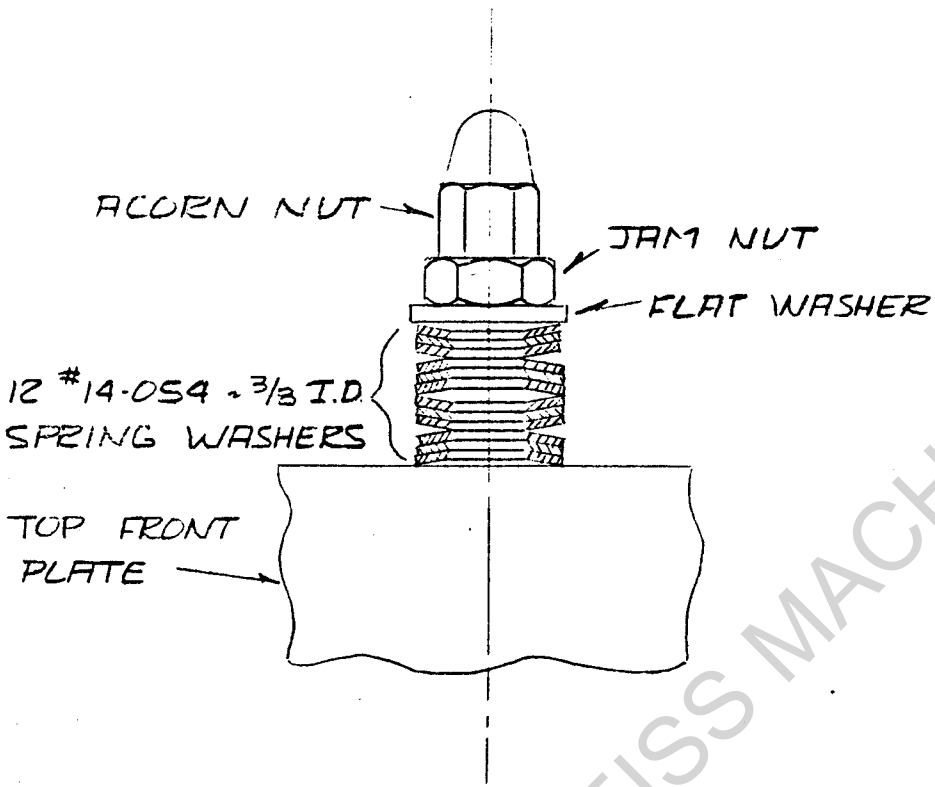

WHEN INSTALLING TIGHTEN JAM NUT UNTIL SPRING WASHERS ARE FLAT THEN BACK OFF ONE TURN AND TIGHTEN ACORN NUT.

5/8 HOLD DOWN

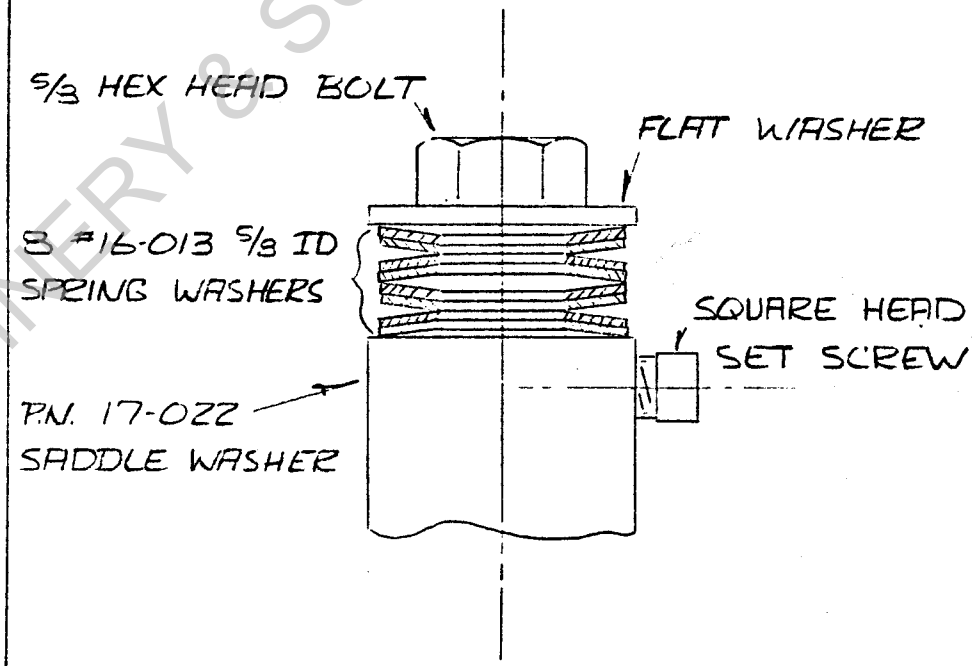

WHEN INSTALLING TIGHTEN 5/8 BOLT UNTIL SPRING WASHERS ARE FLAT THEN BACK OFF 3/4 TURN AND TIGHTEN SQUARE HEAD SET SCREW

H. WEISS MACHINERY & SUPPLY

4-19-90 KG

THE FLAGLER CORP.
50600 E. RUSSELL SCHMIDT
PHN. (313) 598-0330
MT. CLEMENS, MI 48045
(713) 695-0395

H. Weiss Machinery & Supply

BRUNING 77307 FORM # 2542